Tips voor een topdag
visiativ

visiativ

DASSAULT SYSTEMES | The 3DEXPERIENCE® Company

3DEXPERIENCE

DATA MANAGEMENT IN THE CLOUD

© 2022 VISIATIV | ALL RIGHTS RESERVED

Introductie

Winfred Rozeboom

visiativ

Application Consultant | +/- 10 jaar

CAD | PDM | PLM | 3DEXPERIENCE | Visualisation

SOLIDWORKS Elite Application Engineer

Industrial Design Engineer

Winfred.Rozeboom@visiativ.com

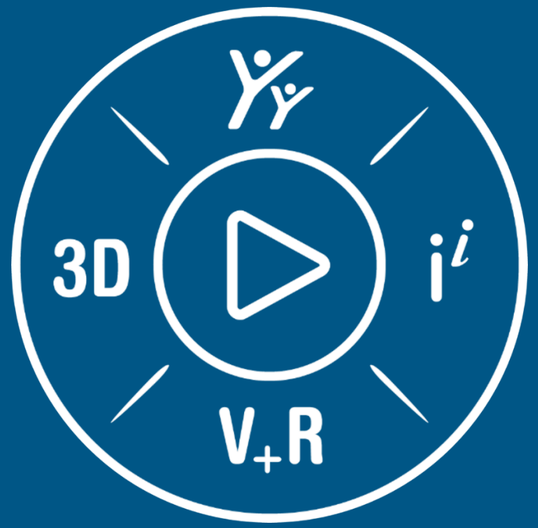
3D
i
V+R

DOCUMENT MANAGEMENT

COLLABORATION

DESIGN RELEASE

CHANGE MANAGEMENT

SOLIDWORKS

visiativ

DASSAULT SYSTEMES

The 3DEXPERIENCE platform

3ds.com/3dexperience

3DEXPERIENCE®

Welcome Eric_ENGINEER

Remember me

Log in

I am not Eric_ENGINEER

Create your 3DEXPERIENCE ID

Forgot your password?

* You can also use your SOLIDWORKS ID

English

Need help?

Waiting for eu1-ds-iam.3dexperience.3ds.com...

Manage cookies

The 3DEXPERIENCE platform

3ds.com/3dexperience

3DEXPERIENCE | 3DDashboard Industry Innovator

Search Demo Tenant

Eric ENGINEER
Demo Tenant

My Tasks | My Data | My Markups | My Changes | My Routes

ENOVIA - Collaborative Tasks - Private • Eric ENGINEER

Create a task...

Context: My Tasks

To Do (2)

Finalize Knee Concept Models

0% 1/26/2022 To Do

Complete Product Specification Document

0% 1/26/2022 To Do

In Work

Completed (9)

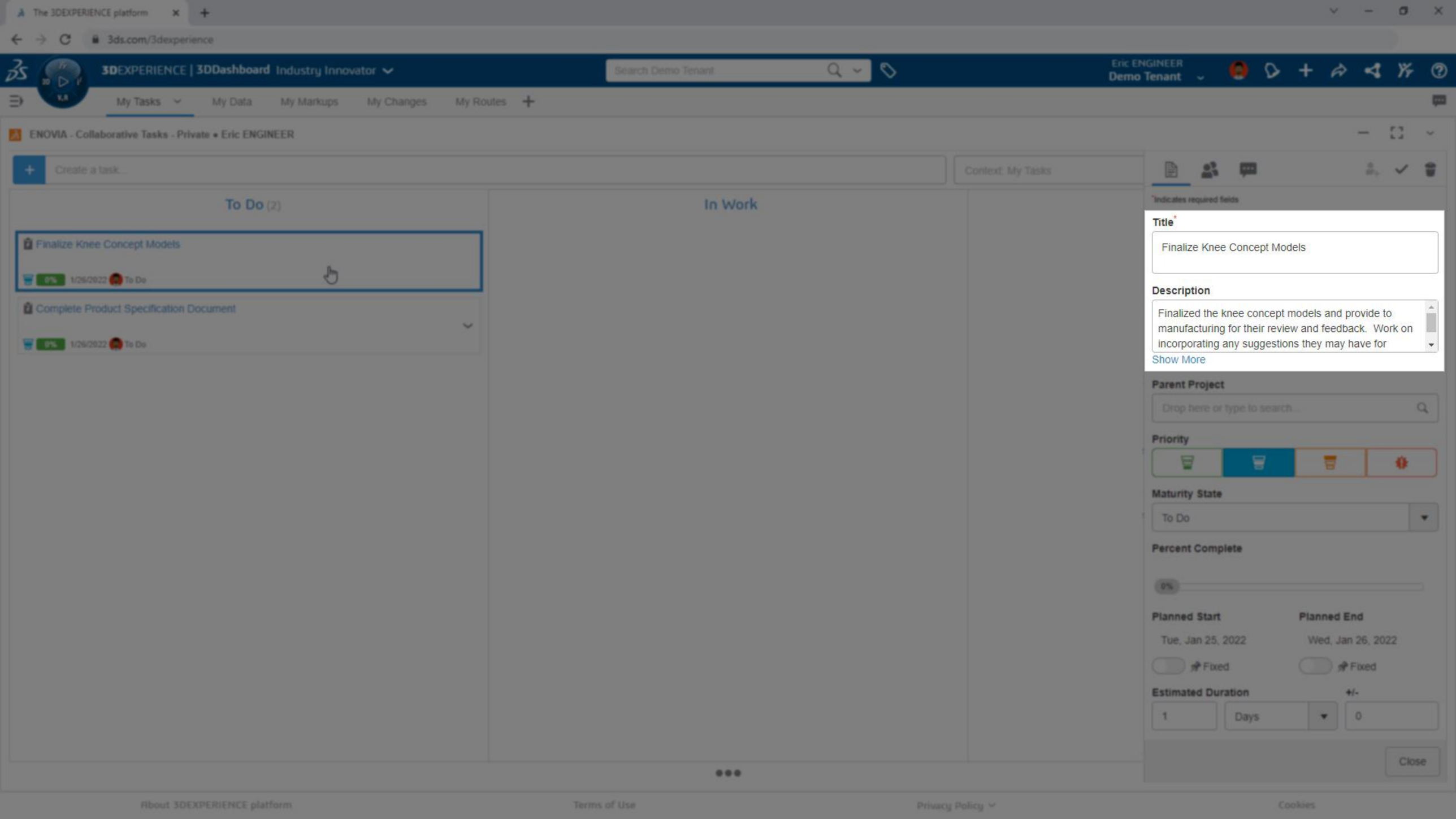
The 3DEXPERIENCE platform
3ds.com/3dexperience
3DEXPERIENCE | 3DDashboard Industry Innovator
Search Demo Tenant
Eric ENGINEER
Demo Tenant
My Tasks
My Data
My Markups
My Changes
My Routes
ENOVIA - Collaborative Tasks - Private • Eric ENGINEER
Create a task...
Context: My Tasks
To Do (2)
In Work
Finalize Knee Concept Models
0%
1/26/2022
To Do
Complete Product Specification Document
0%
1/26/2022
To Do
*Indicates required fields
Title*
Finalize Knee Concept Models
Description
Finalized the knee concept models and provide to manufacturing for their review and feedback. Work on incorporating any suggestions they may have for
Show More
Parent Project
Drop here or type to search...
Priority
Maturity State
To Do
Percent Complete
0%
Planned Start
Tue, Jan 25, 2022
Fixed
Planned End
Wed, Jan 26, 2022
Fixed
Estimated Duration
1
Days
+/-
0
Close
About 3DEXPERIENCE platform
Terms of Use
Privacy Policy
Cookies

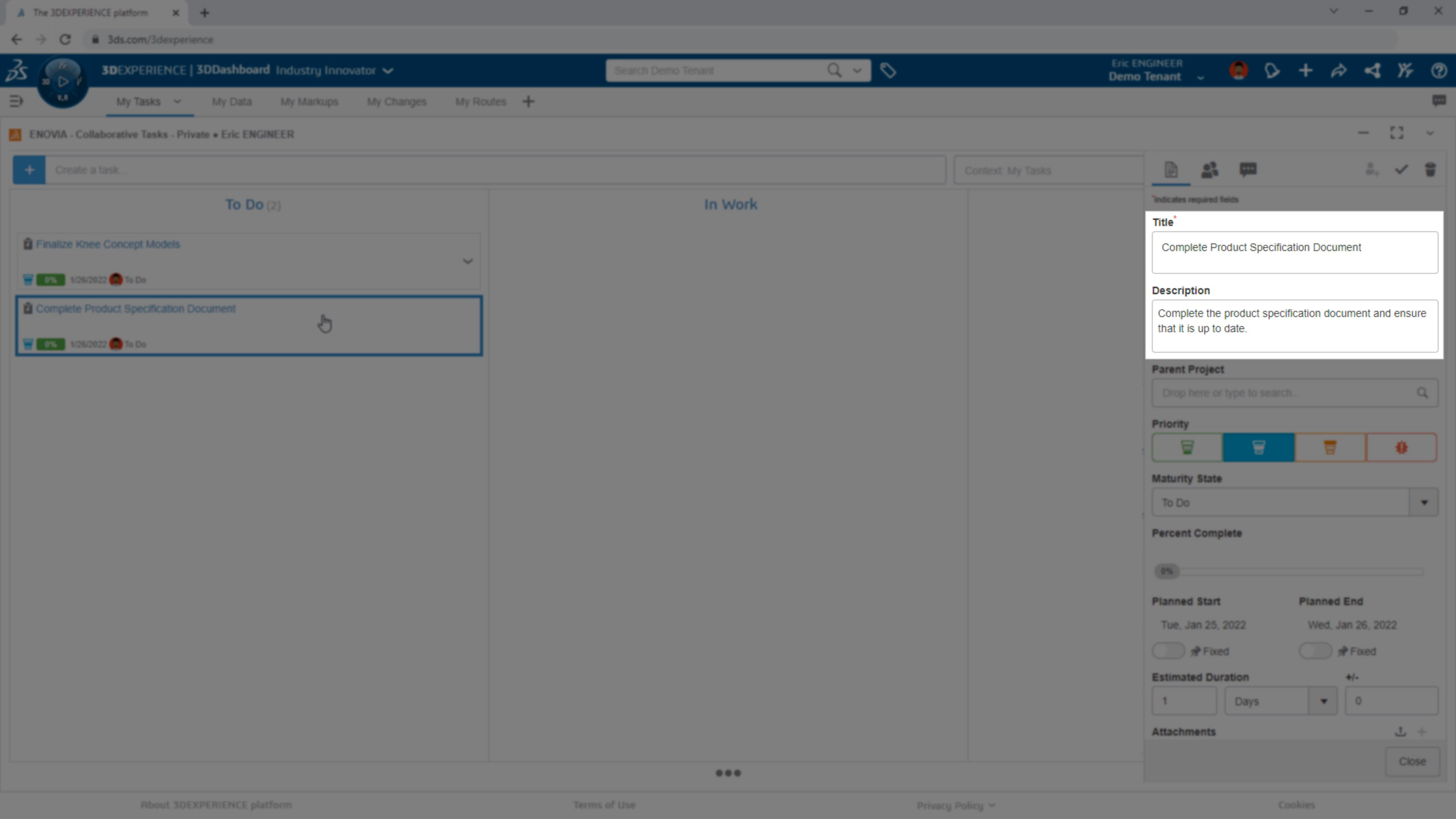
The 3DEXPERIENCE platform
3ds.com/3dexperience
3DEXPERIENCE | 3DDashboard Industry Innovator
Search Demo Tenant
Eric ENGINEER
Demo Tenant
My Tasks
My Data
My Markups
My Changes
My Routes
ENOVIA - Collaborative Tasks - Private • Eric ENGINEER
Create a task...
Context: My Tasks
To Do (2)
In Work
Finalize Knee Concept Models
0% 1/26/2022 To Do
Complete Product Specification Document
0% 1/26/2022 To Do
*Indicates required fields
Title*
Complete Product Specification Document
Description
Complete the product specification document and ensure that it is up to date.
Parent Project
Drop here or type to search...
Priority
Maturity State
To Do
Percent Complete
0%
Planned Start
Tue, Jan 25, 2022
Fixed
Planned End
Wed, Jan 26, 2022
Fixed
Estimated Duration
1
Days
+/-
0
Attachments
Close
About 3DEXPERIENCE platform
Terms of Use
Privacy Policy
Cookies

The 3DEXPERIENCE platform

3ds.com/3dexperience

3DEXPERIENCE | 3DDashboard Industry Innovator

Search Demo Tenant

Eric ENGINEER
Demo Tenant

My Tasks | My Data | My Markups | My Changes | My Routes

ENOVIA - Collaborative Tasks - Private • Eric ENGINEER

Create a task...

Context: My Tasks

To Do (1)

Finalize Knee Concept Models

0% 1/26/2022 To Do

In Work (1)

Complete Product Specification Document

10% 1/26/2022 In Work

Completed (9)

The 3DEXPERIENCE platform

3ds.com/3dexperience

3DEXPERIENCE | 3DDashboard Industry Innovator

Search Demo Tenant

Eric ENGINEER
Demo Tenant

My Tasks | My Data | My Markups | My Changes | My Routes

ENOVIA - Bookmark Editor - BioD... - Projects (Demo Tenant)

Projects

Title	Enterprise Item Number	Description	Revision	Maturity State	Is Last Revision	Lock	Owner	Menu
Project 1000				Draft			Eric ENGINEER	
Project 2000				Draft			Eric ENGINEER	
Project 3000				Draft			Eric ENGINEER	
Project 4000				Draft			Eric ENGINEER	

Bookmark | Document | View | Tools | Lifecycle | Collaboration

3DPlay

3DPlay

Drop your content here

About 3DEXPERIENCE platform | Terms of Use | Privacy Policy | Cookies

The 3DEXPERIENCE platform

3ds.com/3dexperience

3DEXPERIENCE | 3DDashboard Industry Innovator

Search Demo Tenant

Eric ENGINEER
Demo Tenant

My Tasks | My Data | My Markups | My Changes | My Routes

ENOVIA - Bookmark Editor - BioDapt Design - Project 1000 (Demo Tenant)

Projects ▶ Project 1000

Title	Enterprise Item Number	Description	Revision	Maturity State	Is Last Revision	Lock	Owner	Menu
VF2 FOOT		VF2 FOOT ASSEMBLY	A.1	Released	✓		Eric ENGINEER	
VF2 Foot(VF2 Foot)	DT-000935	VF2 Foot Assembly	A.1	Released	✓		Eric ENGINEER	

Bookmark | Document | View | Tools | Lifecycle | Collaboration

3DPlay

3DPlay

Drop your content here

About 3DEXPERIENCE platform | Terms of Use | Privacy Policy | Cookies

The 3DEXPERIENCE platform

3ds.com/3dexperience

3DEXPERIENCE | 3DDashboard Industry Innovator

Search Demo Tenant

Eric ENGINEER
Demo Tenant

My Tasks | My Data | My Markups | My Changes | My Routes

ENOVIA - Bookmark Editor - BioDapt Design - Project 1000 (Demo Tenant)

Projects ▶ Project 1000

	Title	Enterprise Item Number	Description	Revision	Maturity State	Is Last Revision	Lock	Owner	Menu
	VF2 FOOT		VF2 FOOT ASSEMBLY	A.1	Released	✓		Eric ENGINEER	
	VF2 Foot(VF2 Foot)	DT-000935	VF2 Foot Assembly	A.1	Released	✓		Eric ENGINEER	

Bookmark | Document | View | Tools | Lifecycle | Collaboration

3DPlay - VF2 Foot(VF2 Foot)

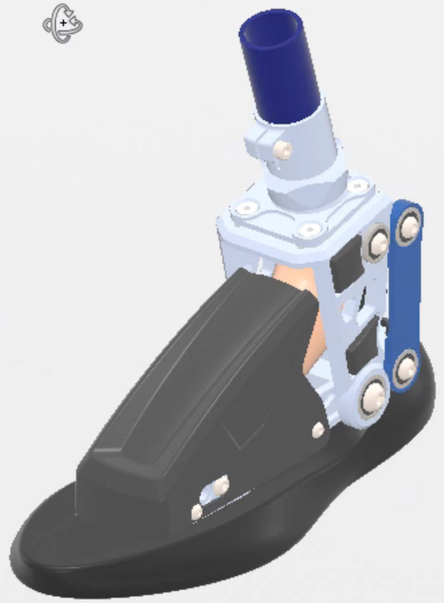

View | Tools

The 3DEXPERIENCE platform

3ds.com/3dexperience

3DEXPERIENCE | 3DDashboard Industry Innovator

Search Demo Tenant

Eric ENGINEER
Demo Tenant

My Tasks | My Data | My Markups | My Changes | My Routes

ENOVIA - Bookmark Editor - BioDapt Design - Project 1000 (Demo Tenant)

Projects ▶ Project 1000

Title	Enterprise Item Number	Description	Revision	Maturity St	Menu
VF2 FOOT		VF2 FOOT ASSEMBLY	A.1	Released	
VF2 Foot(VF2 Foot)	DT-000935	VF2 Foot Assembly	A.1	Released	

Bookmark | Document | View | Tools | Lifecycle | Collaboration

VF2 Foot(VF2 Foot) A.1

Eric ENGINEER 1/25/2022, 8:02:36 PM

▼ Attributes

Type
Physical Product

Title
VF2 Foot(VF2 Foot)

Name
2021-SW-00045647

Revision
A.1

Revision Comment

Description
VF2 Foot Assembly

Creation Date
1/25/2022, 7:51:47 PM

Created From

Scale
Normal Range

Collaborative Policy
Engineering Definition

Modification Date
1/25/2022, 8:02:36 PM

Maturity

3DPlay - VF2 Foot(VF2 Foot)

View | Tools

The 3DEXPERIENCE platform

3ds.com/3dexperience

3DEXPERIENCE | 3DDashboard Industry Innovator

Search Demo Tenant

Eric ENGINEER
Demo Tenant

My Tasks | My Data | My Markups | My Changes | My Routes

ENOVIA - Bookmark Editor - BioDapt Design - Project 1000 (Demo Tenant)

Projects ▶ Project 1000

	Title	Enterprise Item Number	Description	Revision	Maturity State	Is Last Revision	Lock	Owner	Menu
	VF2 FOOT		VF2 FOOT ASSEMBLY	A.1	Released	✓		Eric ENGINEER	
	VF2 Foot(VF2 Foot)	DT-000935	VF2 Foot Assembly	A.1	Released	✓		Eric ENGINEER	

Bookmark | Document | View | Tools | Lifecycle | Collaboration

3DPlay - VF2 Foot(VF2 Foot)

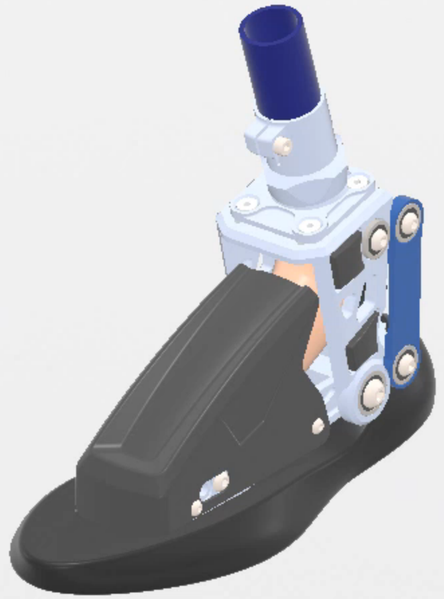

View | Tools

About 3DEXPERIENCE platform | Terms of Use | Privacy Policy | Cookies

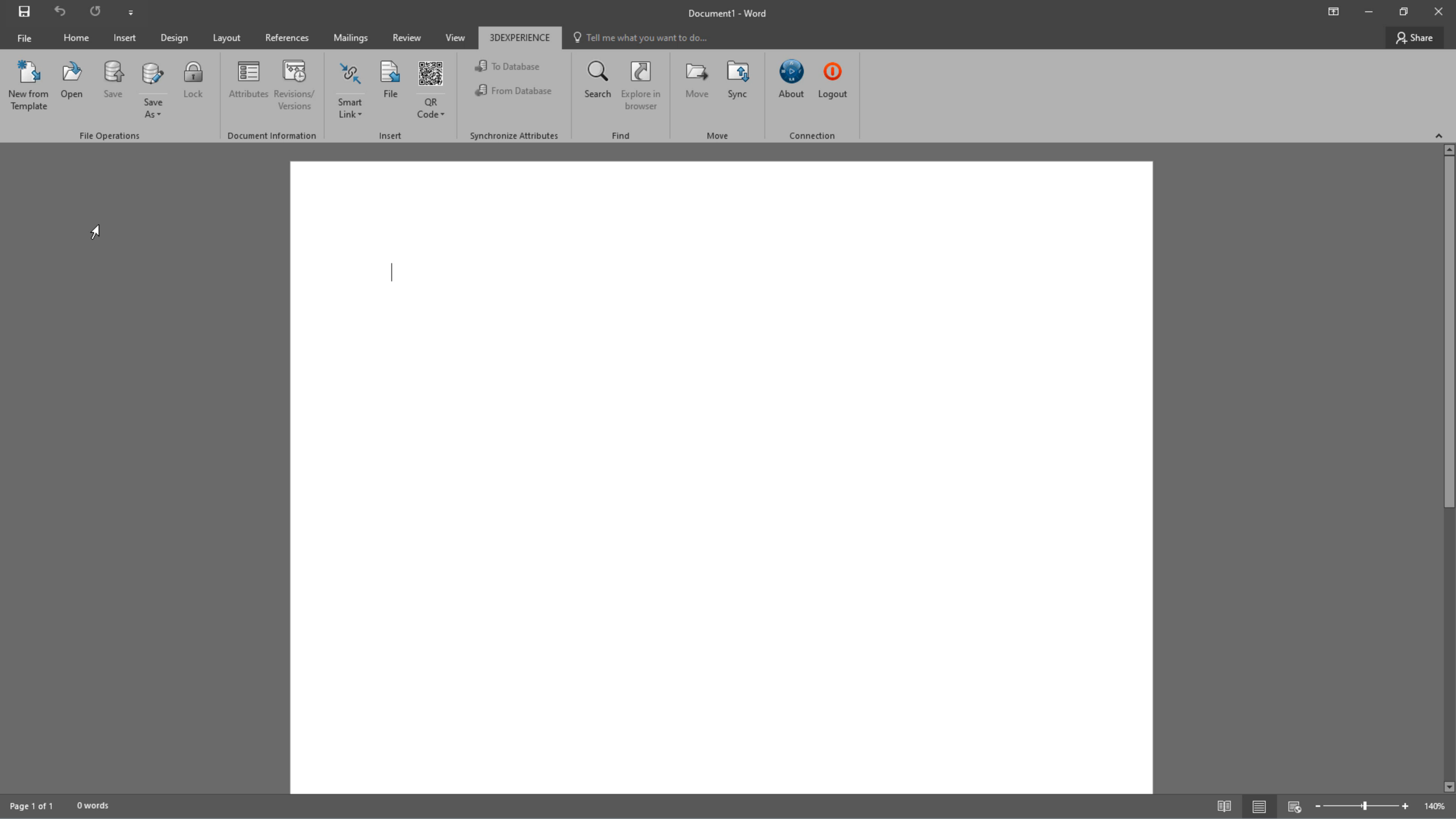
Document1 - Word
File
Home
Insert
Design
Layout
References
Mailings
Review
View
3DEXPERIENCE
Tell me what you want to do...
Share
New from Template
Open
Save
Save As
Lock
File Operations
Attributes
Revisions/ Versions
Document Information
Smart Link
File
QR Code
Insert
To Database
From Database
Synchronize Attributes
Search
Explore in browser
Find
Move
Sync
Move
About
Logout
Connection
Page 1 of 1
0 words
140%

Document(s) downloaded successfully to: c:\temp

PROJECT SCOPE |

January 10, 2022

SOLIDWORKS

OVERVIEW

1. Project Background and Description

[Describe how this project came about, who is involved, and the purpose.]

Note: To delete any tip (such as this) just click it and start typing. If you're not yet ready to add your own text, just click a tip and press spacebar to remove it.

2. Project Scope

[Project scope defines the boundaries of a project. Think of the scope as an imaginary box that will enclose all the project elements/activities. It not only defines what you are doing (what goes into the box), but it sets limits for what will not be done as part of the project (what doesn't fit in the box). Scope answers questions including what will be done, what won't be done, and what the result will look like.]

3. High-Level Requirements

Document(s) downloaded successfully to: c:\temp

PROJECT SCOPE | MOTO KNEE

SOLIDWORKS

January 24, 2022

OVERVIEW

1. Project Background and Description

[Describe how this project came about, who is involved, and the purpose.]

Note: To delete any tip (such as this) just click it and start typing. If you're not yet ready to add your own text, just click a tip and press spacebar to remove it.

2. Project Scope

[Project scope defines the boundaries of a project. Think of the scope as an imaginary box that will enclose all the project elements/activities. It not only defines what you are doing (what goes into the box), but it sets limits for what will not be done as part of the project (what doesn't fit in the box). Scope answers questions including what will be done, what won't be done, and what the result will look like.]

3. High-Level Requirements

Document checked in successfully to object: DOC-SW-0000125

PROJECT SCOPE | MOTO KNEE

SOLIDWORKS

January 24, 2022

OVERVIEW

1. Project Background and Description

[Describe how this project came about, who is involved, and the purpose.]

Note: To delete any tip (such as this) just click it and start typing. If you're not yet ready to add your own text, just click a tip and press spacebar to remove it.

2. Project Scope

[Project scope defines the boundaries of a project. Think of the scope as an imaginary box that will enclose all the project elements/activities. It not only defines what you are doing (what goes into the box), but it sets limits for what will not be done as part of the project (what doesn't fit in the box). Scope answers questions including what will be done, what won't be done, and what the result will look like.]

3. High-Level Requirements

PROJECT SCOPE | MOTO KNEE

SOLIDWORKS

January 24, 2022

OVERVIEW

1. Project Background and Description

[Describe how this project came about, who is involved, and the purpose.]

Note: To delete any tip (such as this) just click it and start typing. If you're not yet ready to add your own text, just click a tip and press spacebar to remove it.

Revisions/Versions

Name	File Name	Title	Revision	Description	State	Locked By	Ver	Originated	Comm
DOC-SW-0000125	Project Specification.docx	Project Specification	A		In Work				
Project Specification.docx	Project Specification.docx						2	1/24/2022 4:07:40 PM	Upda
Project Specification.docx	Project Specification.docx						1	1/24/2022 3:50:46 PM	

The 3DEXPERIENCE platform

3ds.com/3dexperience

3DEXPERIENCE | 3DDashboard Industry Innovator

Search Demo Tenant

Eric ENGINEER
Demo Tenant

My Tasks | My Data | My Markups | My Changes | My Routes

ENOVIA - Collaborative Tasks - Private • Eric ENGINEER

Create a task...

Context: My Tasks

To Do (1)

Finalize Knee Concept Models

0% 1/26/2022 To Do

In Work (1)

Complete Product Specification Document

10% 1/26/2022 In Work

Complete

*Indicates required fields

Title*

Complete Product Specification Document

Description

Complete the product specification document and ensure that it is up to date.

Parent Project

Drop here or type to search...

Priority

Maturity State

In Work

Percent Complete

10%

Actual Start

Tue, Jan 25, 2022

Fixed

Planned End

Wed, Jan 26, 2022

Fixed

Estimated Duration

1

Days

+/-

0

Attachments

Close

SOLIDWORKS

MOTO KNEE - Sheet1

Search MySolidWorks

Smart Dimension | Model Items | Spell Checker | Format Painter | Note | Linear Note Pattern | Balloon | Auto Balloon | Magnetic Line | Surface Finish | Weld Symbol | Hole Callout | Geometric Tolerance | Datum Feature | Datum Target | Blocks | Center Mark | Centerline | Area Hatch/Fill | Revision Symbol | Revision Cloud | Tables

Drawing | Annotation | Sketch | Markup | Evaluate | SOLIDWORKS Add-Ins | Sheet Format

- MOTO KNEE
  - Blocks
  - Annotations
  - Sheet1
    - Sheet Format1
    - Drawing View4
  - Sheet2
    - Sheet Format2
    - Drawing View5
    - Drawing View6
  - Bill of Materials4

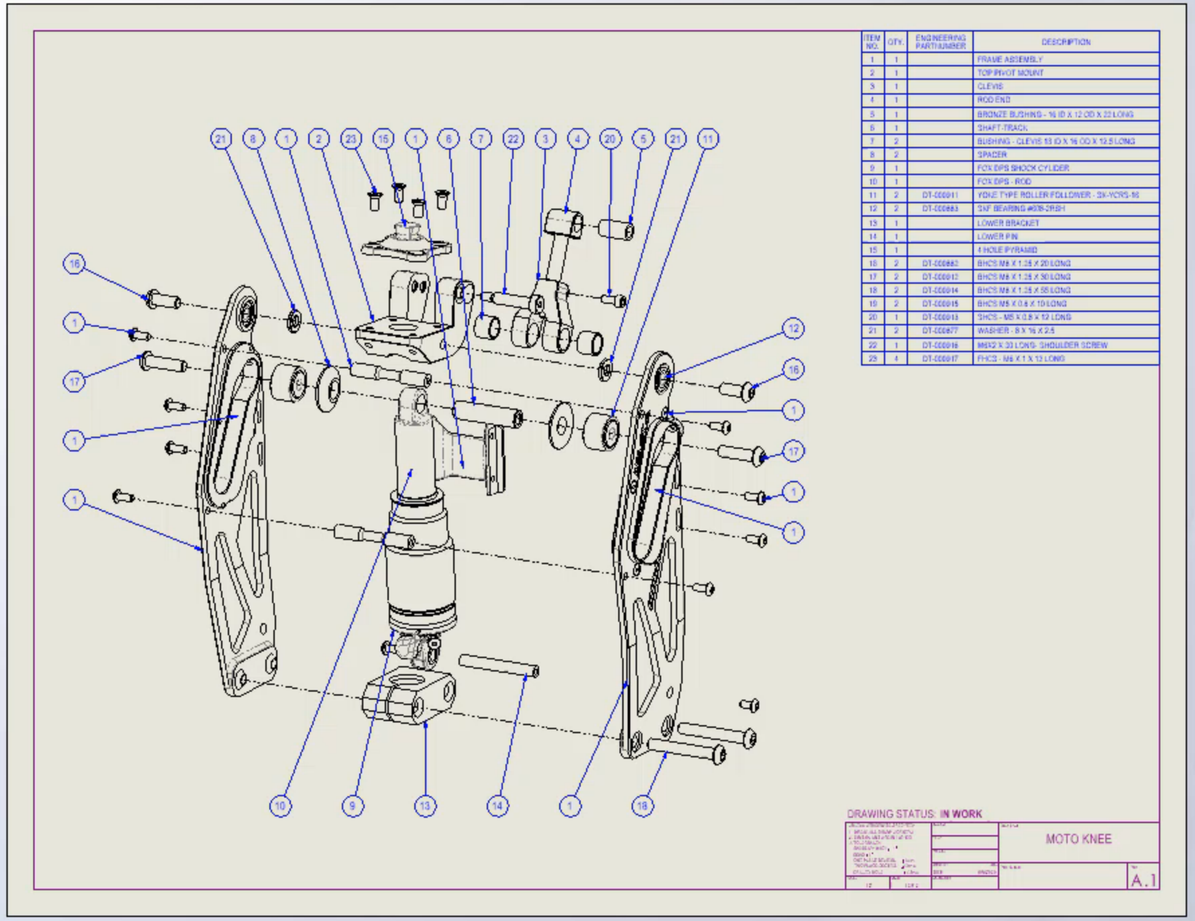

Sheet1 | Sheet2

3DEXPERIENCE

ENOVIA MySession - BioDapt Design (D...

Search Demo Tenant

Component Name	Status	Rev	Is...	Maturity State	Enterprise Item Number
MOTO KNEE		A.1		In Work	
MOTO KNEE (MOTO KNEE)		A.1		In Work	
FHCS<4> (M6 X 1 X 1...		A.1		Released	DT-000917
FHCS<3> (M6 X 1 X 1...		A.1		Released	DT-000917
FHCS<2> (M6 X 1 X 1...		A.1		Released	DT-000917
FHCS<1> (M6 X 1 X 1...		A.1		Released	DT-000917
SHSS<1> (M6x2 X 30 ...		A.1		Released	DT-000916
BHCS<9> (M5 X 0.8 X...		A.1		Released	DT-000915
BHCS<8> (M5 X 0.8 X...		A.1		Released	DT-000915
BHCS<6> (M8 X 1.25 ...		A.1		Released	DT-000914
BHCS<7> (M8 X 1.25 ...		A.1		Released	DT-000914
SHCS<3> (M5 X 0.8 X...		A.1		Released	DT-000913
BHCS<5> (M8 X 1.25 ...		A.1		Released	DT-000912
BHCS<4> (M8 X 1.25 ...		A.1		Released	DT-000912
TRACK FOLLOWER<...		A.1		Released	DT-000911
TRACK FOLLOWER<...		A.1		Released	DT-000911
BALL BEARING<5> (8...		A.1		Released	DT-000883
BALL BEARING<6> (8...		A.1		Released	DT-000883
BHCS<2> (M8 X 1.25 ...		A.1		Released	DT-000882
BHCS<3> (M8 X 1.25 ...		A.1		Released	DT-000882
Spacer<1> (8 x 16 x 2.5)		A.1		Released	DT-000877
Spacer<2> (8 x 16 x 2.5)		A.1		Released	DT-000877
17-853<1> (17-853)		A.1		In Work	
BHCS<1> (M5 X ...		A.1		Released	DT-000910
BHCS<2> (M5 X ...		A.1		Released	DT-000910
BHCS<3> (M5 X ...		A.1		Released	DT-000910
BHCS<4> (M5 X ...		A.1		Released	DT-000910
BHCS<5> (M5 X ...		A.1		Released	DT-000910
BHCS<6> (M5 X ...		A.1		Released	DT-000910
BHCS<7> (M5 X ...		A.1		Released	DT-000910

Lifecycle | Simulation | View | Tools

SOLIDWORKS

Under Defined | Editing Sheet1 | 1 : 2 | MMGS

MOTO KNEE - Sheet1

Search MySolidWorks

Center Mark
Centerline
Area Hatch/Fill
Revision Symbol
Revision Cloud
Tables

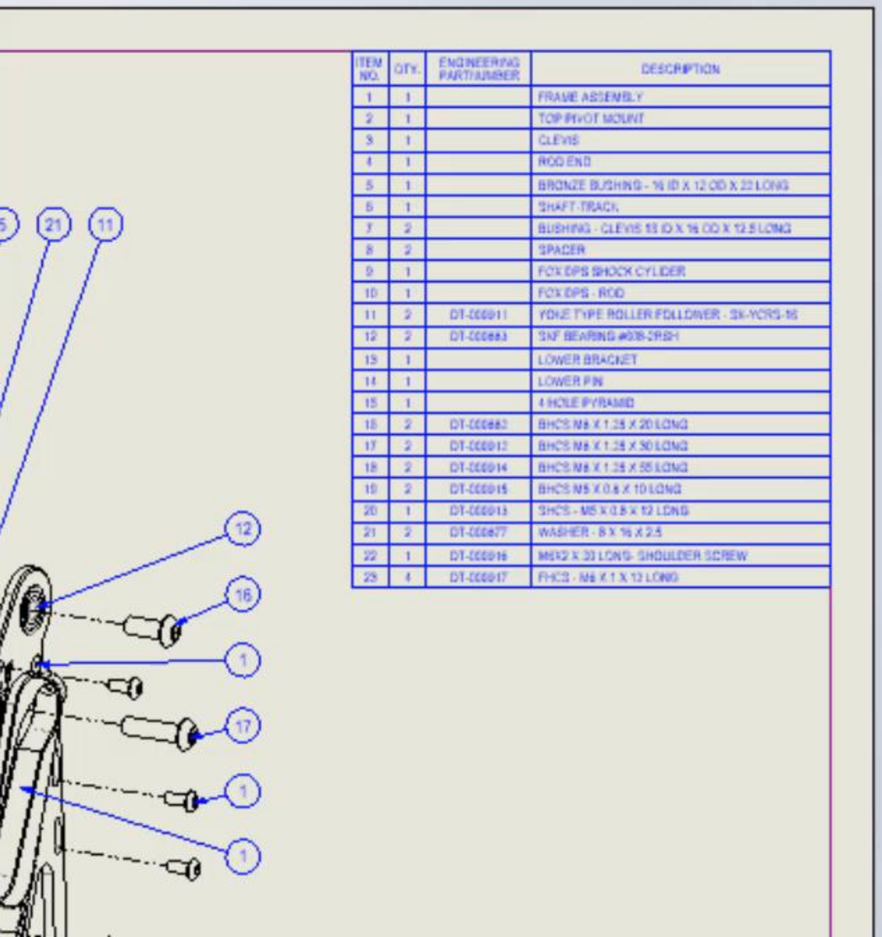

ITEM NO.	QTY.	ENGINEERING PART NUMBER	DESCRIPTION
1	1		FRAME ASSEMBLY
2	1		TOP PIVOT MOUNT
3	1		CLEVIS
4	1		ROD END
5	1		BRONZE BUSHING - 16 ID X 12 OD X 22 LONG
6	1		SHAFT-TRACK
7	2		BUSHING - CLEVIS 10 ID X 16 OD X 12.5 LONG
8	2		SPACER
9	1		FOX DPS SHOCK CYLINDER
10	1		FOX DPS - ROD
11	2	DT-000911	YOKE TYPE ROLLER FOLLOWER - SK-YCRS-16
12	2	DT-000883	SKF BEARING #638-2RSH
13	1		LOWER BRACKET
14	1		LOWER PIN
15	1		4 HOLE PYRAMID
16	2	DT-000882	BHCS M8 X 1.25 X 20 LONG
17	2	DT-000912	BHCS M8 X 1.25 X 30 LONG
18	2	DT-000914	BHCS M8 X 1.25 X 55 LONG
19	2	DT-000915	BHCS M5 X 0.8 X 10 LONG
20	1	DT-000913	SHCS - M5 X 0.8 X 12 LONG
21	2	DT-000877	WASHER - 8 X 16 X 2.5
22	1	DT-000916	M8X2 X 30 LONG- SHOULDER SCREW
23	4	DT-000917	FHCS - M6 X 1 X 12 LONG

3DEXPERIENCE

ENOVIA MySession - BioDapt Design (D...

Search Demo Tenant

Component Name	Status		Rev	Is...	Maturity State	Enterprise Item Number
MOTO KNEE			A.1		In Work	
MOTO KNEE (MOTO KNEE)			A.1		In Work	
FHCS<4> (M6 X 1 X 1...			A.1		Released	DT-000917
FHCS<3> (M6 X 1 X 1...			A.1		Released	DT-000917
FHCS<2> (M6 X 1 X 1...			A.1		Released	DT-000917
FHCS<1> (M6 X 1 X 1...			A.1		Released	DT-000917
SHSS<1> (M6x2 X 30 ...			A.1		Released	DT-000916
BHCS<9> (M5 X 0.8 X...			A.1		Released	DT-000915
BHCS<8> (M5 X 0.8 X...			A.1		Released	DT-000915
BHCS<6> (M8 X 1.25 ...			A.1		Released	DT-000914
BHCS<7> (M8 X 1.25 ...			A.1		Released	DT-000914
SHCS<3> (M5 X 0.8 X...			A.1		Released	DT-000913
BHCS<5> (M8 X 1.25 ...			A.1		Released	DT-000912
BHCS<4> (M8 X 1.25 ...			A.1		Released	DT-000912
TRACK FOLLOWER<...			A.1		Released	DT-000911
TRACK FOLLOWER<...			A.1		Released	DT-000911
BALL BEARING<5> (8...			A.1		Released	DT-000883

MOTO KNEE - Sheet1

Search MySolidWorks

Center Mark
Centerline
Area Hatch/Fill
Revision Symbol
Revision Cloud
Tables

3DEXPERIENCE

ENOVIA MySession - BioDapt Design (D...

Search Demo Tenant

Component Name	Status		Rev	Is...	Maturity State	Enterprise Item Number
MOTO KNEE			A.1		In Work	
MOTO KNEE (MOTO KNEE)			A.1		In Work	
FHCS<4> (M6 X 1 X 1...			A.1		Released	DT-000917
FHCS<3> (M6 X 1 X 1...			A.1		Released	DT-000917
FHCS<2> (M6 X 1 X 1...			A.1		Released	DT-000917
FHCS<1> (M6 X 1 X 1...			A.1		Released	DT-000917
SHSS<1> (M6x2 X 30 ...			A.1		Released	DT-000916
BHCS<9> (M5 X 0.8 X...			A.1		Released	DT-000915
BHCS<8> (M5 X 0.8 X...			A.1		Released	DT-000915
BHCS<6> (M8 X 1.25 ...			A.1		Released	DT-000914
BHCS<7> (M8 X 1.25 ...			A.1		Released	DT-000914
SHCS<3> (M5 X 0.8 X...			A.1		Released	DT-000913
BHCS<5> (M8 X 1.25 ...			A.1		Released	DT-000912
BHCS<4> (M8 X 1.25 ...			A.1		Released	DT-000912
TRACK FOLLOWER<...			A.1		Released	DT-000911
TRACK FOLLOWER<...			A.1		Released	DT-000911
BALL BEARING<5> (8...			A.1		Released	DT-000883

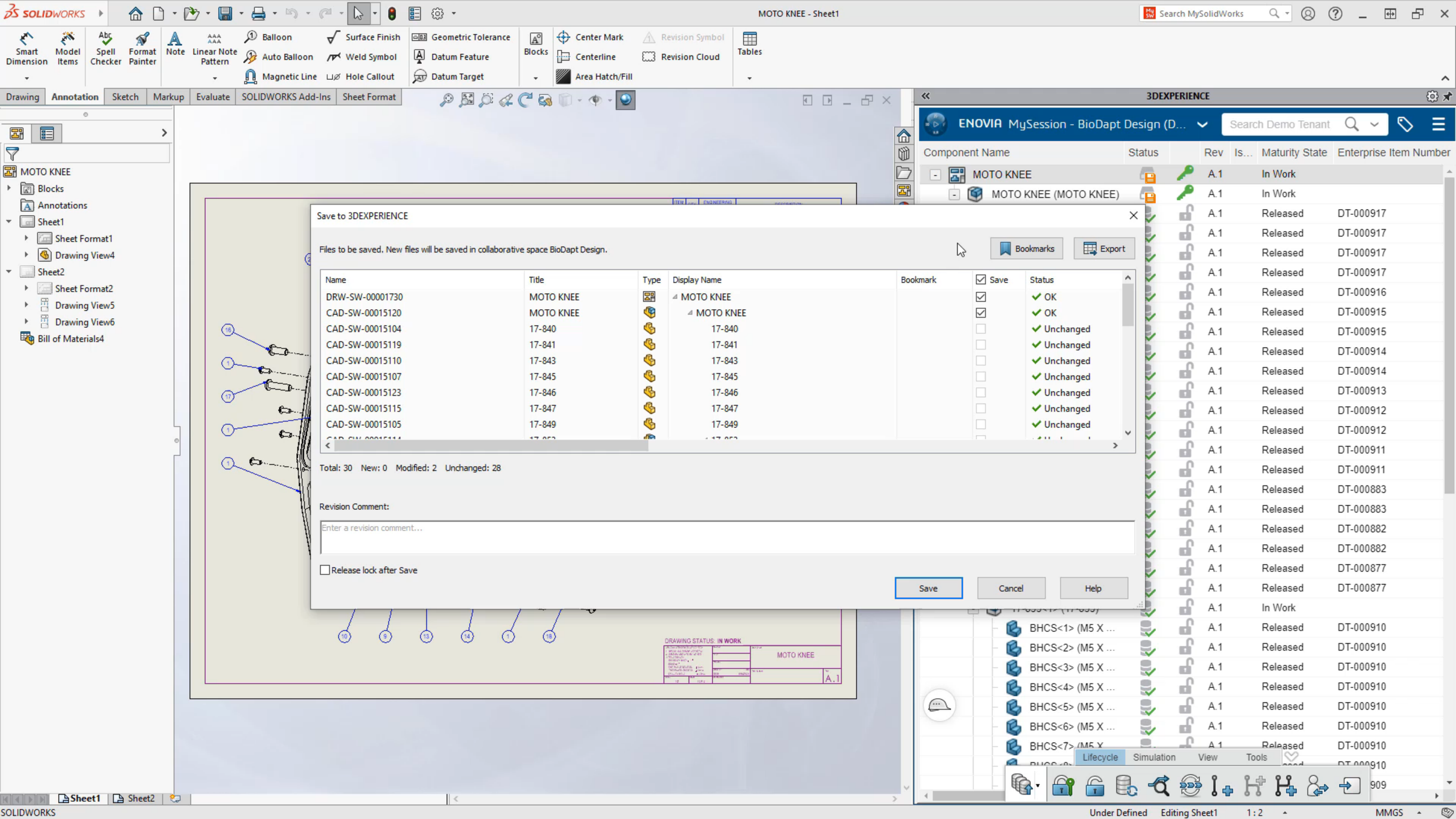
MOTO KNEE - Sheet1
Search MySolidWorks
Smart Dimension
Model Items
Spell Checker
Format Painter
Note
Linear Note Pattern
Balloon
Auto Balloon
Magnetic Line
Surface Finish
Weld Symbol
Hole Callout
Geometric Tolerance
Datum Feature
Datum Target
Blocks
Center Mark
Centerline
Area Hatch/Fill
Revision Symbol
Revision Cloud
Tables
Drawing
Annotation
Sketch
Markup
Evaluate
SOLIDWORKS Add-Ins
Sheet Format
MOTO KNEE
Blocks
Annotations
Sheet1
Sheet Format1
Drawing View4
Sheet2
Sheet Format2
Drawing View5
Drawing View6
Bill of Materials4
3DEXPERIENCE
ENOVIA MySession - BioDapt Design (D...
Search Demo Tenant
Component Name
Status
Rev
Is...
Maturity State
Enterprise Item Number
MOTO KNEE
MOTO KNEE (MOTO KNEE)
Save to 3DEXPERIENCE
Files to be saved. New files will be saved in collaborative space BioDapt Design.
Bookmarks
Export
Name
Title
Type
Display Name
Bookmark
Save
Status
DRW-SW-00001730
CAD-SW-00015120
CAD-SW-00015104
CAD-SW-00015119
CAD-SW-00015110
CAD-SW-00015107
CAD-SW-00015123
CAD-SW-00015115
CAD-SW-00015105
Total: 30 New: 0 Modified: 2 Unchanged: 28
Revision Comment:
Enter a revision comment...
Release lock after Save
Save
Cancel
Help
DRAWING STATUS: IN WORK
Lifecycle
Simulation
View
Tools
Sheet1
Sheet2
SOLIDWORKS
Under Defined
Editing Sheet1
1 : 2
MMGS

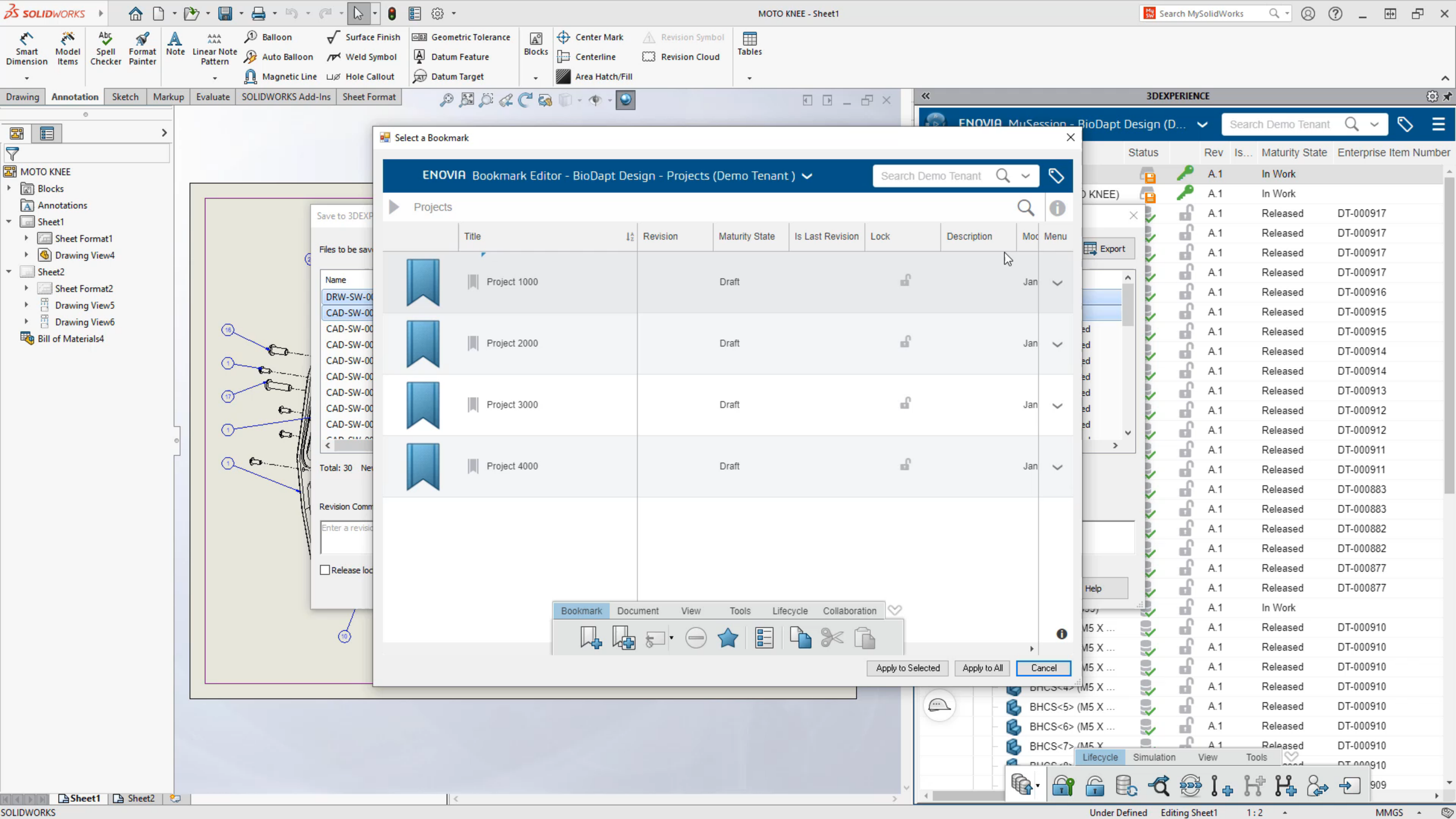
MOTO KNEE - Sheet1
Search MySolidWorks
Smart Dimension
Model Items
Spell Checker
Format Painter
Note
Linear Note Pattern
Balloon
Auto Balloon
Magnetic Line
Surface Finish
Weld Symbol
Hole Callout
Geometric Tolerance
Datum Feature
Datum Target
Blocks
Center Mark
Centerline
Area Hatch/Fill
Revision Symbol
Revision Cloud
Tables
Drawing
Annotation
Sketch
Markup
Evaluate
SOLIDWORKS Add-Ins
Sheet Format
MOTO KNEE
Blocks
Annotations
Sheet1
Sheet Format1
Drawing View4
Sheet2
Sheet Format2
Drawing View5
Drawing View6
Bill of Materials4
Select a Bookmark
ENOVIA Bookmark Editor - BioDapt Design - Projects (Demo Tenant)
Search Demo Tenant
Projects
Title
Revision
Maturity State
Is Last Revision
Lock
Description
Menu
Project 1000
Draft
Project 2000
Draft
Project 3000
Draft
Project 4000
Draft
Bookmark
Document
View
Tools
Lifecycle
Collaboration
Apply to Selected
Apply to All
Cancel
3DEXPERIENCE
ENOVIA MySession - BioDapt Design (D...
Search Demo Tenant
Status
Rev
Is...
Maturity State
Enterprise Item Number
A.1
In Work
Released
DT-000917
DT-000916
DT-000915
DT-000914
DT-000913
DT-000912
DT-000911
DT-000883
DT-000882
DT-000877
DT-000910
BHCS<4> (M5 X ...
BHCS<5> (M5 X ...
BHCS<6> (M5 X ...
BHCS<7> (M5 X ...
Lifecycle
Simulation
View
Tools
Export
Help
Sheet1
Sheet2
SOLIDWORKS
Under Defined
Editing Sheet1
1 : 2
MMGS

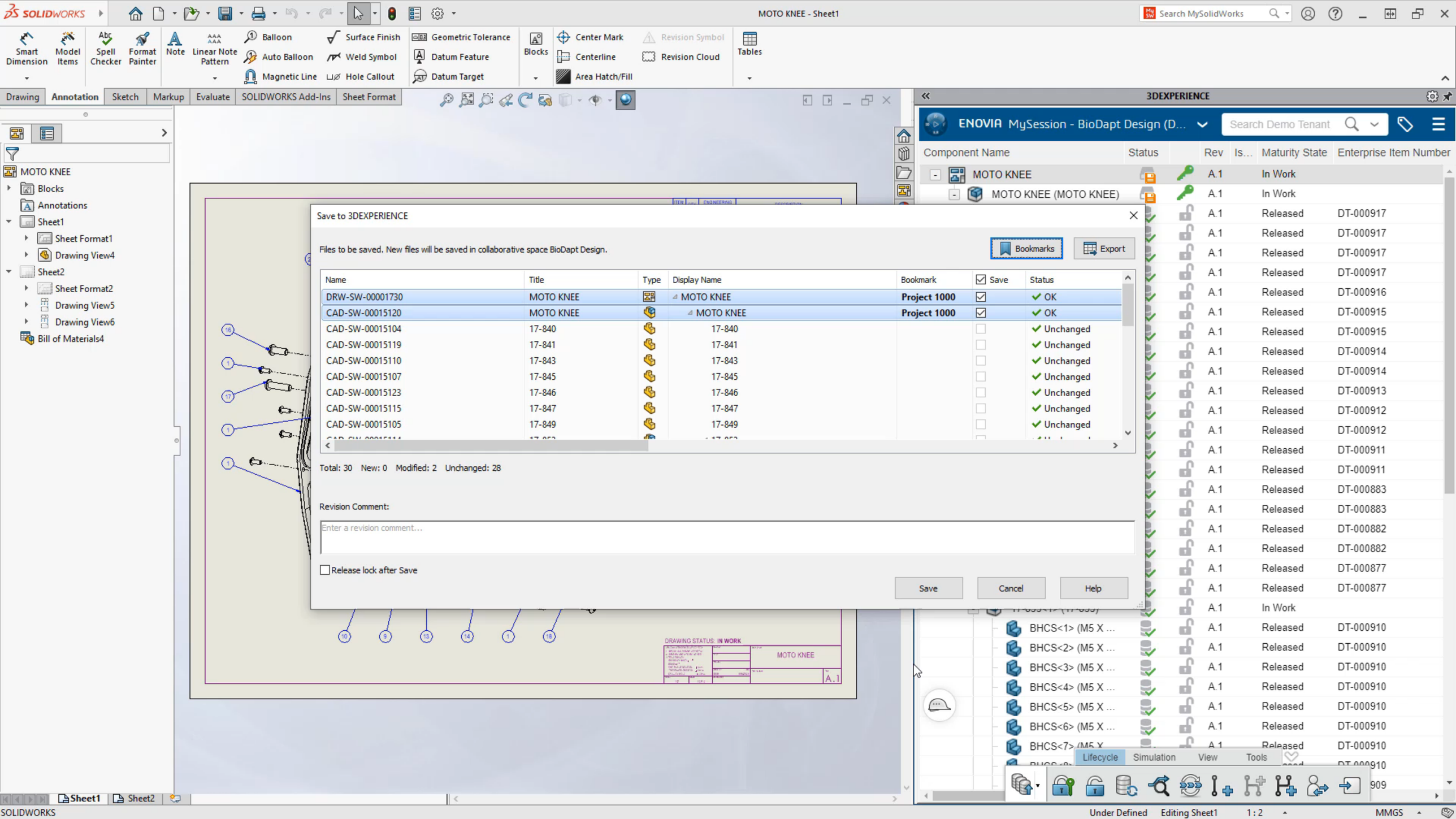
MOTO KNEE - Sheet1
Search MySolidWorks
Smart Dimension
Model Items
Spell Checker
Format Painter
Note
Linear Note Pattern
Balloon
Auto Balloon
Magnetic Line
Surface Finish
Weld Symbol
Hole Callout
Geometric Tolerance
Datum Feature
Datum Target
Blocks
Center Mark
Centerline
Area Hatch/Fill
Revision Symbol
Revision Cloud
Tables
Drawing
Annotation
Sketch
Markup
Evaluate
SOLIDWORKS Add-Ins
Sheet Format
MOTO KNEE
Blocks
Annotations
Sheet1
Sheet Format1
Drawing View4
Sheet2
Sheet Format2
Drawing View5
Drawing View6
Bill of Materials4
3DEXPERIENCE
ENOVIA MySession - BioDapt Design (D...
Search Demo Tenant
Component Name
Status
Rev
Is...
Maturity State
Enterprise Item Number
MOTO KNEE
A.1
In Work
MOTO KNEE (MOTO KNEE)
A.1
In Work
A.1
Released
DT-000917
A.1
Released
DT-000917
A.1
Released
DT-000917
A.1
Released
DT-000917
A.1
Released
DT-000916
A.1
Released
DT-000915
A.1
Released
DT-000915
A.1
Released
DT-000914
A.1
Released
DT-000914
A.1
Released
DT-000913
A.1
Released
DT-000912
A.1
Released
DT-000912
A.1
Released
DT-000911
A.1
Released
DT-000911
A.1
Released
DT-000883
A.1
Released
DT-000883
A.1
Released
DT-000882
A.1
Released
DT-000882
A.1
Released
DT-000877
A.1
Released
DT-000877
A.1
In Work
BHCS<1> (M5 X ...
BHCS<2> (M5 X ...
BHCS<3> (M5 X ...
BHCS<4> (M5 X ...
BHCS<5> (M5 X ...
BHCS<6> (M5 X ...
BHCS<7> (M5 X ...
Lifecycle
Simulation
View
Tools
Save to 3DEXPERIENCE
Files to be saved. New files will be saved in collaborative space BioDapt Design.
Bookmarks
Export
Name
Title
Type
Display Name
Bookmark
Save
Status
DRW-SW-00001730
MOTO KNEE
MOTO KNEE
Project 1000
OK
CAD-SW-00015120
MOTO KNEE
MOTO KNEE
Project 1000
OK
CAD-SW-00015104
17-840
17-840
Unchanged
CAD-SW-00015119
17-841
17-841
Unchanged
CAD-SW-00015110
17-843
17-843
Unchanged
CAD-SW-00015107
17-845
17-845
Unchanged
CAD-SW-00015123
17-846
17-846
Unchanged
CAD-SW-00015115
17-847
17-847
Unchanged
CAD-SW-00015105
17-849
17-849
Unchanged
Total: 30 New: 0 Modified: 2 Unchanged: 28
Revision Comment:
Enter a revision comment...
Release lock after Save
Save
Cancel
Help
DRAWING STATUS: IN WORK
MOTO KNEE
A.1
Sheet1
Sheet2
SOLIDWORKS
Under Defined
Editing Sheet1
1 : 2
MMGS

SOLIDWORKS

MOTO KNEE - Sheet1 [Read-only]

Search MySolidWorks

Smart Dimension | Model Items | Spell Checker | Format Painter | Note | Linear Note Pattern | Balloon | Auto Balloon | Magnetic Line | Surface Finish | Weld Symbol | Hole Callout | Geometric Tolerance | Datum Feature | Datum Target | Blocks | Center Mark | Centerline | Area Hatch/Fill | Revision Symbol | Revision Cloud | Tables

Drawing | Annotation | Sketch | Markup | Evaluate | SOLIDWORKS Add-Ins | Sheet Format

MOTO KNEE
- Blocks
- Annotations
- Sheet1
  - Sheet Format1
  - Drawing View4
- Sheet2
  - Sheet Format2
  - Drawing View5
  - Drawing View6
- Bill of Materials4

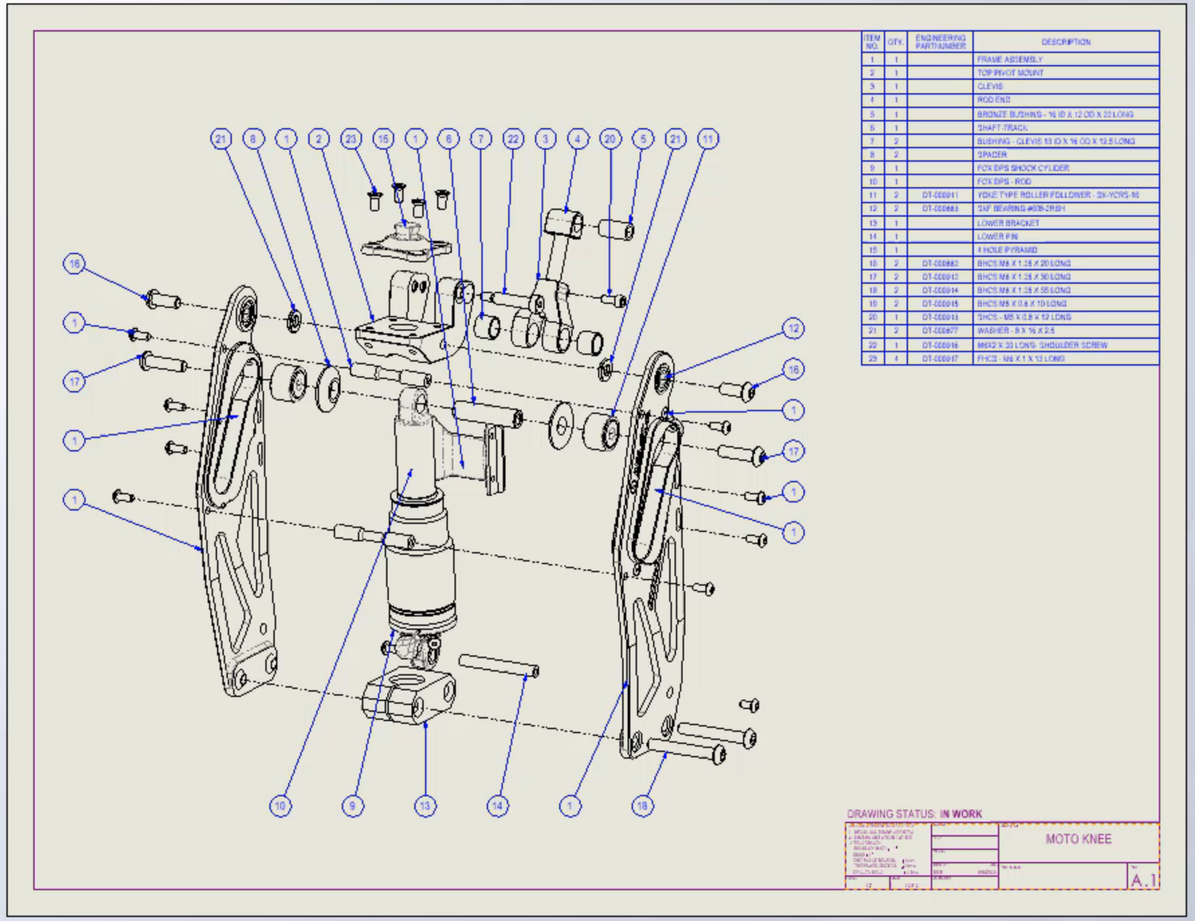

Sheet1 | Sheet2

3DEXPERIENCE

ENOVIA MySession - BioDapt Design (D...

Search Demo Tenant

Component Name	Status	Rev	Is...	Maturity State	Enterprise Item Number
MOTO KNEE		A.1		In Work	
MOTO KNEE (MOTO KNEE)		A.1		In Work	
FHCS<4> (M6 X 1 X 1...		A.1		Released	DT-000917
FHCS<3> (M6 X 1 X 1...		A.1		Released	DT-000917
FHCS<2> (M6 X 1 X 1...		A.1		Released	DT-000917
17-853<1> (17-853)		A.1		In Work	
17-833-R<1> (17-...		A.1		In Work	
17-833-L<2> (17-...		A.1		In Work	
17-838<1> (Left)		A.1		In Work	
17-838<2> (Right)		A.1		In Work	
17-835<1> (17-835)		A.1		In Work	
17-836<1> (17-836)		A.1		In Work	
17-836<2> (17-836)		A.1		In Work	
FHCS<1> (M4 X 0...		A.1		Released	DT-000909
FHCS<2> (M4 X 0...		A.1		Released	DT-000909
BHCS<1> (M5 X ...		A.1		Released	DT-000910
BHCS<2> (M5 X ...		A.1		Released	DT-000910
BHCS<3> (M5 X ...		A.1		Released	DT-000910
BHCS<4> (M5 X ...		A.1		Released	DT-000910
BHCS<5> (M5 X ...		A.1		Released	DT-000910
BHCS<6> (M5 X ...		A.1		Released	DT-000910
BHCS<7> (M5 X ...		A.1		Released	DT-000910
BHCS<8> (M5 X ...		A.1		Released	DT-000910
FHCS<3> (M4 X 0...		A.1		Released	DT-000909
FHCS<4> (M4 X 0...		A.1		Released	DT-000909
FHCS<5> (M4 X 0...		A.1		Released	DT-000909
FHCS<6> (M4 X 0...		A.1		Released	DT-000909
FHCS<7> (M4 X 0...		A.1		Released	DT-000909
FHCS<8> (M4 X 0...		A.1		Released	DT-000909
17-840<1> (17-840)		A.1		In Work	

Lifecycle | Simulation | View | Tools

SOLIDWORKS | Under Defined | Editing Sheet1 | 1 : 2 | MMGS

DOCUMENT MANAGEMENT

SECURE CLOUD BASED FILE STORAGE FOR ALL PROJECT DATA

COLLABORATION

DESIGN RELEASE

CHANGE MANAGEMENT

SOLIDWORKS

visiativ

DASSAULT SYSTEMES

The 3DEXPERIENCE platform

3ds.com/3dexperience

3DEXPERIENCE | 3DDashboard Industry Innovator

Search Demo Tenant

Eric ENGINEER
Demo Tenant

My Tasks | My Data | My Markups | My Changes | My Routes

ENOVIA - Bookmark Editor - BioDapt Design - Project 1000 (Demo Tenant)

Projects ▶ Project 1000

	Title	Enterprise Item Number	Description	Revision	Maturity State	Is Last Revision	Lock	Owner	Menu
	MOTO KNEE		MOTO KNEE	A.1	In Work	✓		Eric ENGINEER	
	MOTO KNEE(MOTO KNEE)		MOTO KNEE	A.1	In Work	✓		Eric ENGINEER	
	Project Specification			A	In Work	✓		Eric ENGINEER	
	VF2 FOOT		VF2 FOOT ASSEMBLY	A.1	Released	✓		Eric ENGINEER	
	VF2 Foot(VF2 Foot)	DT-000918	VF2 Foot Assembly	A.1	Released	✓		Eric ENGINEER	

Bookmark | Document | View | Tools | Lifecycle | Collaboration

3DPlay - MOTO KNEE(MOTO KNEE)

View | Tools

rd Industry Innovator

Search Demo Tenant

Eric ENGINEER
Demo Tenant

My Markups | My Changes | My Routes +

oject 1000 (Demo Tenant)

Enterprise Item Number	Description	Revision	Maturity S	Menu
	MOTO KNEE	A.1	In Work	
	MOTO KNEE	A.1	In Work	
		A	In Work	
	VF2 FOOT ASSEMBLY	A.1	Released	
DT-000918	VF2 Foot Assembly	A.1	Released	

MOTO KNEE(MOTO KNEE) A.1

Eric ENGINEER 1/24/2022, 1:55:41 PM

0 1

Eric ENGINEER - just now
@Sam SUPPLIER Can you review the design for assembly ease and serviceability?
Reply

Write a comment

3DPlay - MOTO KNEE(MOTO KNEE)

The 3DEXPERIENCE platform

3ds.com/3dexperience

3DEXPERIENCE | 3DDashboard Industry Innovator

Search

Sam SUPPLIER

My Tasks | My Data | My Designs

ENOVIA - Product Structure Explore

Product Structure Explore

Explore your structure in a easy and efficient way

Access your work

- Recents
- Open Content
- Open Products
- Open Filters

Recents

Drop content here

— or —

Open Content

ENOVIA - 3D Navigate

3D Navigate

Navigate your 3D models in a easy and efficient way

Access your work

- Recents
- Open Content
- Open Products
- Open Filters

Recents

Drop content here

— or —

Open Content

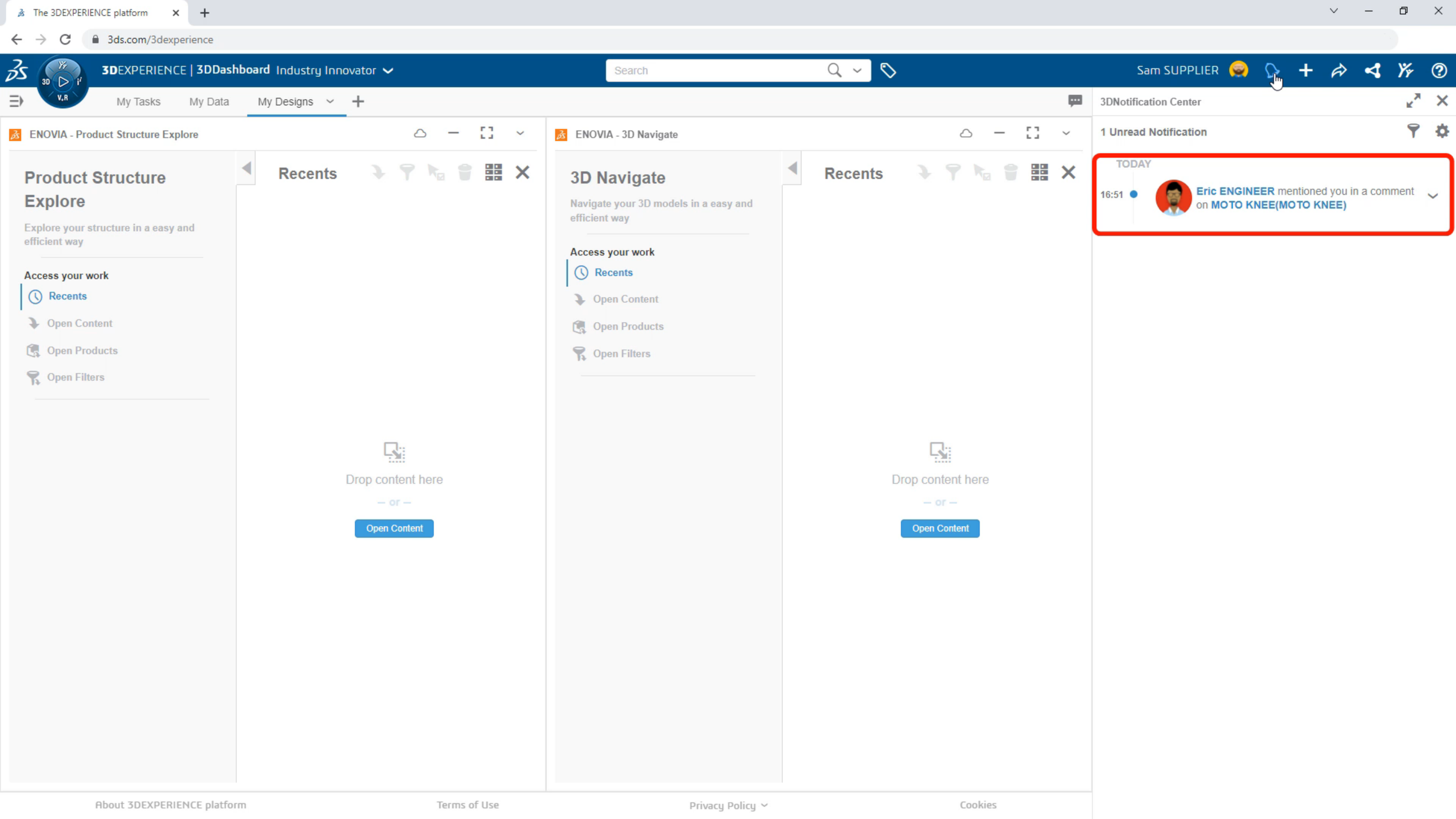
The 3DEXPERIENCE platform
3ds.com/3dexperience
3DEXPERIENCE | 3DDashboard Industry Innovator
Search
Sam SUPPLIER
My Tasks
My Data
My Designs
ENOVIA - Product Structure Explore
Product Structure Explore
Explore your structure in a easy and efficient way
Access your work
Recents
Open Content
Open Products
Open Filters
Recents
Drop content here
— or —
Open Content
ENOVIA - 3D Navigate
3D Navigate
Navigate your 3D models in a easy and efficient way
Access your work
Recents
Open Content
Open Products
Open Filters
Recents
Drop content here
— or —
Open Content
3DNotification Center
1 Unread Notification
TODAY
16:51
Eric ENGINEER mentioned you in a comment on MOTO KNEE(MOTO KNEE)
About 3DEXPERIENCE platform
Terms of Use
Privacy Policy
Cookies

The 3DEXPERIENCE platform

3ds.com/3dexperience

3DEXPERIENCE | 3DDashboard Industry Innovator

Search

Sam SUPPLIER

ENOVIA - Properties - MOTO KNEE(MOTO KNEE)

MOTO KNEE(MOTO KNEE) A.1

Eric ENGINEER 1/24/2022, 1:55:41 PM

Properties | Sharing | View | Change | Comments | Relations | Derived outputs | Revisions

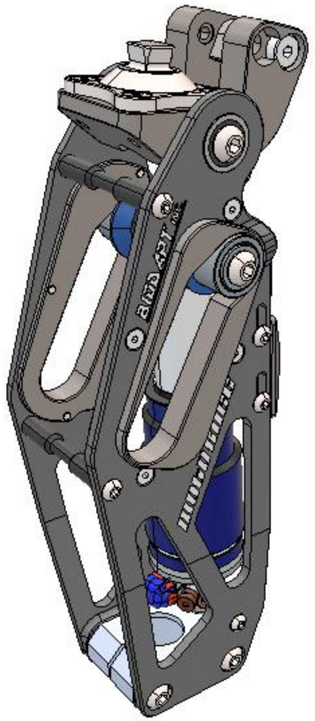

The 3DEXPERIENCE platform

3ds.com/3dexperience

3DEXPERIENCE | 3DDashboard Industry Innovator

2021-SW-00045539

Sam SUPPLIER

Search results for "2021-SW-00045539"

What

Type

1
3D

Show all

Where

Source 1

Collaborative Spa... 1

Who

Persons 1

Eric ENGINEER 1
United States

When

Modification Date

From: dd / mm / yyyy To: dd / mm / yyyy

More tags

1 Results

	Title	Type	Description	Name	Modification Date	Creation Date	Revision
1	MOTO KNEE(MOTO KNEE)	Physical Product	MOTO KNEE	2021-SW-00045539	01/24/2022 1:55:41 PM	01/24/2022 9:35:26 AM	A.1

The 3DEXPERIENCE platform

3ds.com/3dexperience

3DEXPERIENCE | 3DDashboard Industry Innovator

Search

Sam SUPPLIER

My Tasks | My Data | My Designs

ENOVIA - Product Structure Explore - MOTO KNEE(MOTO KNEE)

Title	Enterprise Item Number	Description	Po...	Revision	Maturity State	Owner	Spec...	T	Menu
MOTO KNEE(MOTO KNEE)		MOTO KNEE		A.1	In Work	Eric ENGINEER			

View | Tools

ENOVIA - 3D Navigate - MOTO KNEE(MOTO KNEE)

View | Tools

Loading complete

The 3DEXPERIENCE platform

3ds.com/3dexperience

3DEXPERIENCE | 3DDashboard Industry Innovator

Search

Sam SUPPLIER

My Tasks | My Data | My Designs

ENOVIA - Product Structure Explore - MOTO KNEE(MOTO KNEE)

Title	Enterprise Item Number	Description	Po...	Revision	Maturity State	Owner	Spec...	Menu
MOTO KNEE(MOTO KNEE)		MOTO KNEE		A.1	In Work	Eric ENGINEER		
17-871(17-871)		FOX DPS SHOCK CYLI...		A.1	In Work	Eric ENGINEER		
Spacer(8 x 16 x 2.5)	DT-000877	WASHER - 8 x 16 x 2.5		A.1	Released	Eric ENGINEER		
BALL BEARING(8 ID ...	DT-000883	SKF BEARING #608-2...		A.1	Released	Eric ENGINEER		
TRACK FOLLOWER(...	DT-000911	YOKE TYPE ROLLER ...		A.1	Released	Eric ENGINEER		
FHCS(M6 X 1 X 12 L...	DT-000917	FHCS - M6 X 1 X 12 LO...		A.1	Released	Eric ENGINEER		
17-845(17-845)		CLEVIS		A.1	In Work	Eric ENGINEER		
BHCS(M5 X 0.8 X 10 ...	DT-000915	BHCS M5 X 0.8 X 10 L...		A.1	Released	Eric ENGINEER		
17-843(17-843)		ROD END		A.1	In Work	Eric ENGINEER		
17-872(17-872)		FOX DPS - ROD		A.1	In Work	Eric ENGINEER		
17-874(17-874)		LOWER PIN		A.1	In Work	Eric ENGINEER		
17-846(17-846)		BUSHING - CLEVIS 13 ...		A.1	In Work	Eric ENGINEER		
FHCS(M6 X 1 X 12 L...	DT-000917	FHCS - M6 X 1 X 12 LO...		A.1	Released	Eric ENGINEER		
BHCS(M8 X 1.25 X 3...	DT-000912	BHCS M8 X 1.25 X 30 ...		A.1	Released	Eric ENGINEER		
17-847(17-847)		SHAFT-TRACK		A.1	In Work	Eric ENGINEER		
FHCS(M6 X 1 X 12 L...	DT-000917	FHCS - M6 X 1 X 12 LO...		A.1	Released	Eric ENGINEER		
17-899(17-899)		LOWER BRACKET		A.1	In Work	Eric ENGINEER		
17-862(17-862)		BRONZE BUSHING - 1...		A.1	In Work	Eric ENGINEER		
BHCS(M5 X 0.8 X 10 ...	DT-000915	BHCS M5 X 0.8 X 10 L...		A.1	Released	Eric ENGINEER		

View | Tools

ENOVIA - 3D Navigate - MOTO KNEE(MOTO KNEE)

View | Tools

Loading complete

The 3DEXPERIENCE platform

3ds.com/3dexperience

3DEXPERIENCE | 3DDashboard Industry Innovator

Search

Sam SUPPLIER

My Tasks | My Data | My Designs

ENOVIA - Product Structure Explore - MOTO KNEE(MOTO KNEE)

Title	Enterprise Item Number	Description	Po...	Revision	Maturity State	Owner	Spec...	Menu
MOTO KNEE(MOTO KNEE)		MOTO KNEE		A.1	In Work	Eric ENGINEER		
17-871(17-871)		FOX DPS SHOCK CYLI...		A.1	In Work	Eric ENGINEER		
Spacer(8 x 16 x 2.5)	DT-000877	WASHER - 8 x 16 x 2.5		A.1	Released	Eric ENGINEER		
BALL BEARING(8 ID ...	DT-000883	SKF BEARING #608-2...		A.1	Released	Eric ENGINEER		
TRACK FOLLOWER(...	DT-000911	YOKE TYPE ROLLER ...		A.1	Released	Eric ENGINEER		
FHCS(M6 X 1 X 12 L...	DT-000917	FHCS - M6 X 1 X 12 LO...		A.1	Released	Eric ENGINEER		
17-845(17-845)		CLEVIS		A.1	In Work	Eric ENGINEER		
Relations								
17-845-FAIR ...		FIRST ARTICLE INSPE...		A	In Work	Sam SUPPLIER		
BHCS(M5 X 0.8 X 10 ...	DT-000915	BHCS M5 X 0.8 X 10 L...		A.1	Released	Eric ENGINEER		
17-843(17-843)		ROD END		A.1	In Work	Eric ENGINEER		
17-872(17-872)		FOX DPS - ROD		A.1	In Work	Eric ENGINEER		
17-874(17-874)		LOWER PIN		A.1	In Work	Eric ENGINEER		
17-846(17-846)		BUSHING - CLEVIS 13 ...		A.1	In Work	Eric ENGINEER		
FHCS(M6 X 1 X 12 L...	DT-000917	FHCS - M6 X 1 X 12 LO...		A.1	Released	Eric ENGINEER		
BHCS(M8 X 1.25 X 3...	DT-000912	BHCS M8 X 1.25 X 30 ...		A.1	Released	Eric ENGINEER		
17-847(17-847)		SHAFT-TRACK		A.1	In Work	Eric ENGINEER		
FHCS(M6 X 1 X 12 L...	DT-000917	FHCS - M6 X 1 X 12 LO...		A.1	Released	Eric ENGINEER		
17-899(17-899)		LOWER BRACKET			In Work	Eric ENGINEER		

View | Tools

ENOVIA - 3D Navigate - MOTO KNEE(MOTO KNEE)

View | Tools

Loading complete

The 3DEXPERIENCE platform

3ds.com/3dexperience

3DEXPERIENCE | 3DDashboard Industry Innovator

Search

Sam SUPPLIER

My Tasks | My Data | My Designs

Where
- Bookmark 1
- Collaborative Space 1
- Engineering Workspace 1

Who
- Last Modified By 2
- Organization 1
- Owner 1
- Vendor 3

When
- Creation Date 1
- Is Last Revision 1
- Modification Date 1

How
- Make Or Buy? 2
  - MAKE
  - BUY
- Manufacturable/Procurab

Select
Exclude
Group

ENOVIA - Product Structure Explore - MOTO KNEE(MOTO KNEE)

Title	Enterprise Item Number	Description	Po...	Revision	Maturity St	Menu
MOTO KNEE(MOTO KNEE)		MOTO KNEE		A.1	In Work	
17-871(17-871)		FOX DPS SHOCK CYLI...		A.1	In Work	
Spacer(8 x 16 x 2.5)	DT-000877	WASHER - 8 x 16 x 2.5		A.1	Released	
BALL BEARING(8 ID ...	DT-000883	SKF BEARING #608-2...		A.1	Released	
TRACK FOLLOWER(...	DT-000911	YOKE TYPE ROLLER ...		A.1	Released	
FHCS(M6 X 1 X 12 L...	DT-000917	FHCS - M6 X 1 X 12 LO...		A.1	Released	
17-845(17-845)		CLEVIS		A.1	In Work	
BHCS(M5 X 0.8 X 10 ...	DT-000915	BHCS M5 X 0.8 X 10 L...		A.1	Released	
17-843(17-843)		ROD END		A.1	In Work	
17-872(17-872)		FOX DPS - ROD		A.1	In Work	
17-874(17-874)		LOWER PIN		A.1	In Work	
17-846(17-846)		BUSHING - CLEVIS 13 ...		A.1	In Work	
FHCS(M6 X 1 X 12 L...	DT-000917	FHCS - M6 X 1 X 12 LO...		A.1	Released	
BHCS(M8 X 1.25 X 3...	DT-000912	BHCS M8 X 1.25 X 30 ...		A.1	Released	
17-847(17-847)		SHAFT-TRACK		A.1	In Work	
FHCS(M6 X 1 X 12 L...	DT-000917	FHCS - M6 X 1 X 12 LO...		A.1	Released	
17-899(17-899)		LOWER BRACKET		A.1	In Work	
17-862(17-862)		BRONZE BUSHING - 1...		A.1	In Work	
BHCS(M5 X 0.8 X 10 ...	DT-000915				Released	

View | Tools

ENOVIA - 3D Navigate - MOTO KNEE(MOTO KN...

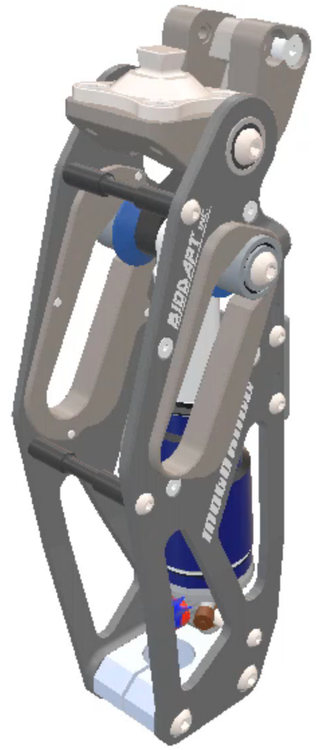

View | Tools

The 3DEXPERIENCE platform

3ds.com/3dexperience

3DEXPERIENCE | 3DDashboard Industry Innovator

Search

Sam SUPPLIER

My Tasks | My Data | My Designs

Selected Tags

Make Or Buy?

- **Where**
  - Bookmark 1
  - Collaborative Space 1
  - Engineering Workspace 1
- **Who**
  - Last Modified By 2
  - Organization 1
  - Owner 1
  - Vendor 3
- **When**
  - Creation Date 1
  - Is Last Revision 1
  - Modification Date 1
- **How**
  - Make Or Buy? 2
    - MAKE 17
    - BUY

ENOVIA - Product Structure Explore - MOTO KNEE(MOTO KNEE)

Title	Enterprise Item Number	Description	Po...	Revision	Maturity State	Menu
MOTO KNEE(MOTO KNEE)		MOTO KNEE		A.1	In Work	
BUY						
MAKE						
Other						

View Tools

ENOVIA - 3D Navigate - MOTO KNEE(MOTO KN...

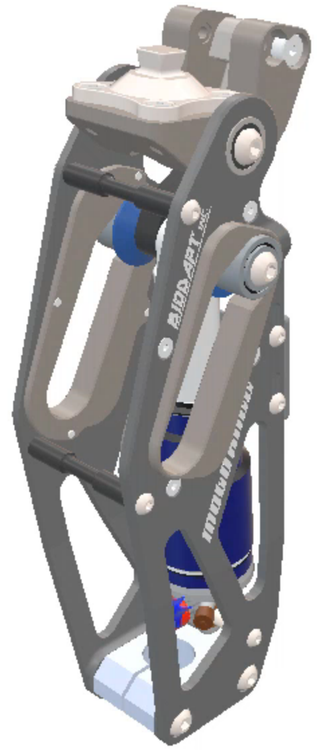

View Tools

The 3DEXPERIENCE platform

3ds.com/3dexperience

3DEXPERIENCE | 3DDashboard Industry Innovator

Search

Sam SUPPLIER

My Tasks | My Data | My Designs

Selected Tags

Make Or Buy?

Where
- Bookmark 1
- Collaborative Space 1
- Engineering Workspace 1

Who
- Last Modified By 2
- Organization 1
- Owner 1
- Vendor 3

When
- Creation Date 1
- Is Last Revision 1
- Modification Date 1

How
- Make Or Buy? 2
  - MAKE 17
  - BUY

ENOVIA - Product Structure Explore - MOTO KNEE(MOTO KNEE)

Title	Enterprise Item Number	Description	Po...	Revision	Maturity State	Menu
MOTO KNEE(MOTO KNEE)		MOTO KNEE		A.1	In Work	
BUY						
MAKE						
17-871(17-871)		FOX DPS SHOCK CYLI...		A.1	In Work	
17-845(17-845)		CLEVIS		A.1	In Work	
17-843(17-843)		ROD END		A.1	In Work	
17-872(17-872)		FOX DPS - ROD		A.1	In Work	
17-874(17-874)		LOWER PIN		A.1	In Work	
17-846(17-846)		BUSHING - CLEVIS 13 ...		A.1	In Work	
17-847(17-847)		SHAFT-TRACK		A.1	In Work	
17-899(17-899)		LOWER BRACKET		A.1	In Work	
17-862(17-862)		BRONZE BUSHING - 1...		A.1	In Work	
17-853(17-853)		FRAME ASSEMBLY		A.1	In Work	
17-846(17-846)		BUSHING - CLEVIS 13 ...		A.1	In Work	
17-849(17-849)		SPACER		A.1	In Work	
17-840(17-840)		TOP PIVOT MOUNT		A.1	In Work	
17-849(17-849)		SPACER		A.1	In Work	
Other						

View | Tools

ENOVIA - 3D Navigate - MOTO KNEE(MOTO KN...

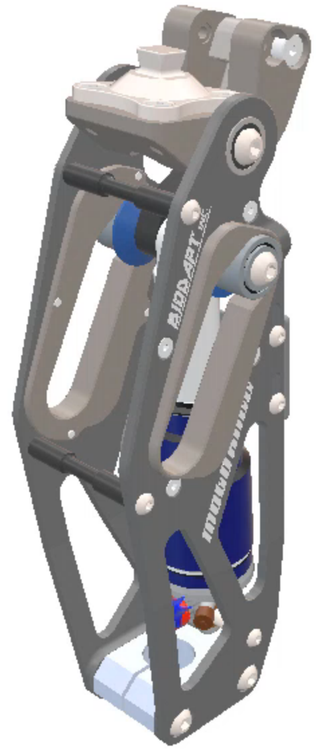

View | Tools

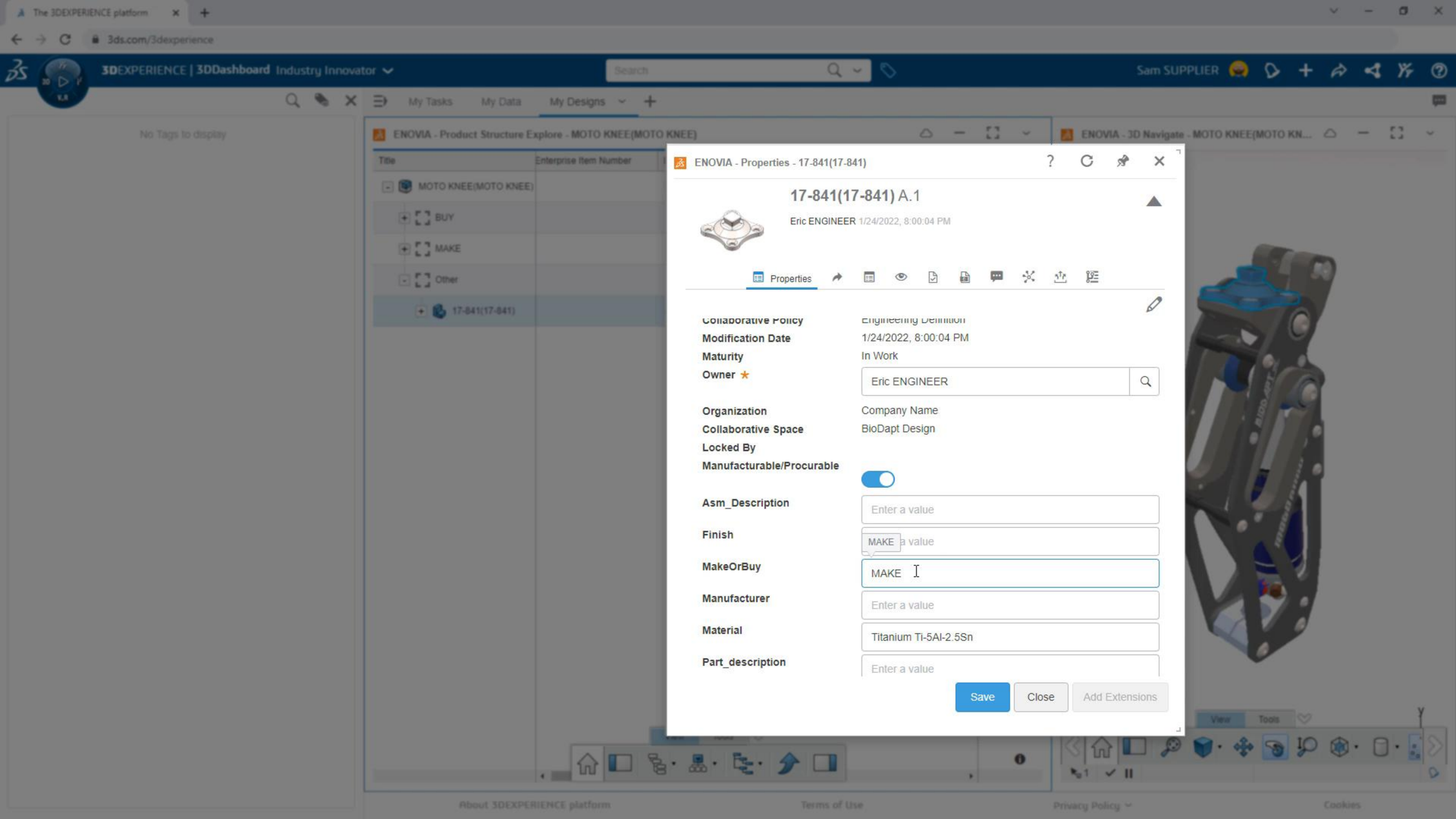
ENOVIA - Properties - 17-841(17-841)
17-841(17-841) A.1
Eric ENGINEER 1/24/2022, 8:00:04 PM
Properties
Collaborative Policy
Engineering Definition
Modification Date
1/24/2022, 8:00:04 PM
Maturity
In Work
Owner
Eric ENGINEER
Organization
Company Name
Collaborative Space
BioDapt Design
Locked By
Manufacturable/Procurable
Asm_Description
Enter a value
Finish
MAKE
MakeOrBuy
MAKE
Manufacturer
Enter a value
Material
Titanium Ti-5Al-2.5Sn
Part_description
Enter a value
Save
Close
Add Extensions

The 3DEXPERIENCE platform

3ds.com/3dexperience

3DEXPERIENCE | 3DDashboard Industry Innovator

Search

Sam SUPPLIER

No Tags to display

My Tasks | My Data | My Designs

ENOVIA - Product Structure Explore - MOTO KNEE(MOTO KNEE)

Title	Enterprise Item Number	Description	Po...	Revision	Maturity State	Menu
MOTO KNEE(MOTO KNEE)		MOTO KNEE		A.1	In Work	
BUY						
MAKE						

View | Tools

ENOVIA - 3D Navigate - MOTO KNEE(MOTO KN...

View | Tools

About 3DEXPERIENCE platform | Terms of Use | Privacy Policy | Cookies

The 3DEXPERIENCE platform

3ds.com/3dexperience

3DEXPERIENCE | 3DDashboard Industry Innovator

Search

Sam SUPPLIER

No Tags to display

My Tasks | My Data | My Designs

ENOVIA - Product Structure Explore - MOTO KNEE(MOTO KNEE)

Title	Enterprise Item Number	Description	Po...	Revision	Maturity State	Menu
MOTO KNEE(MOTO KNEE)		MOTO KNEE		A.1	In Work	
BUY						
MAKE						

View | Tools

ENOVIA - 3D Navigate - MOTO KNEE(MOTO KN...

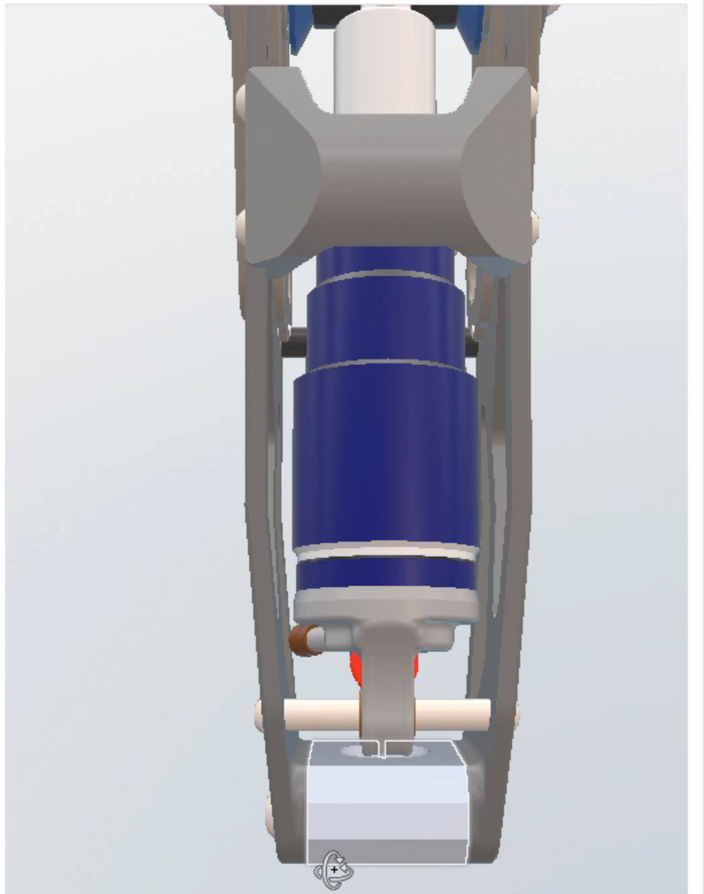

View | Tools

About 3DEXPERIENCE platform | Terms of Use | Privacy Policy | Cookies

The 3DEXPERIENCE platform

3ds.com/3dexperience

3DEXPERIENCE | 3DDashboard Industry Innovator

Search

Sam SUPPLIER

No Tags to display

My Tasks | My Data | My Designs

ENOVIA - Product Structure Explore - MOTO KNEE(MOTO ...

Title	Enterprise Item Number	Description	Menu
MOTO KNEE(MOTO KNEE)		MOTO KNEE	
BUY			
MAKE			

View | Tools

ENOVIA - 3D Navi...

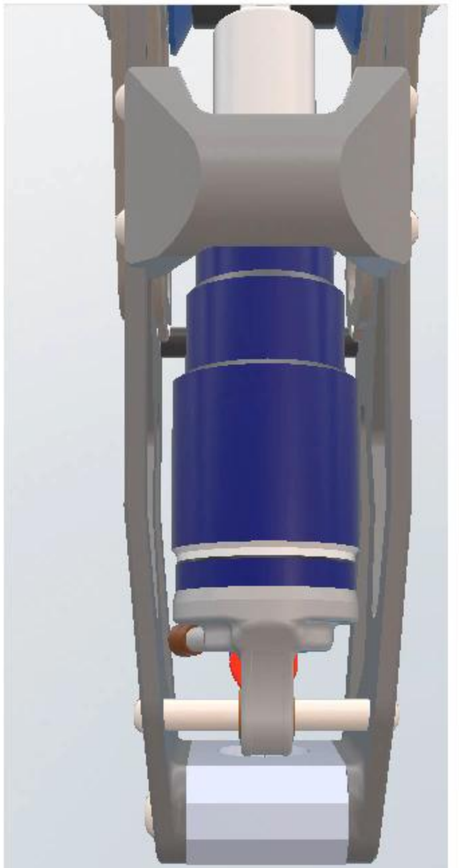

View | Tools

3DSwym Social Collaboration and Innovation

Eric ENGINEER

Monday, January 24

Eric ENGINEER 5:57 PM
Hi Sam

Sam SUPPLIER 8:08 PM
I have a few ideas on the new Moto Knee - have a few minutes to catch up?

Eric ENGINEER 8:09 PM
Sure, let's jump on a call and discuss

Start writing

The 3DEXPERIENCE platform

3ds.com/3dexperience

Sam SUPPLIER, Eric ENGINEER

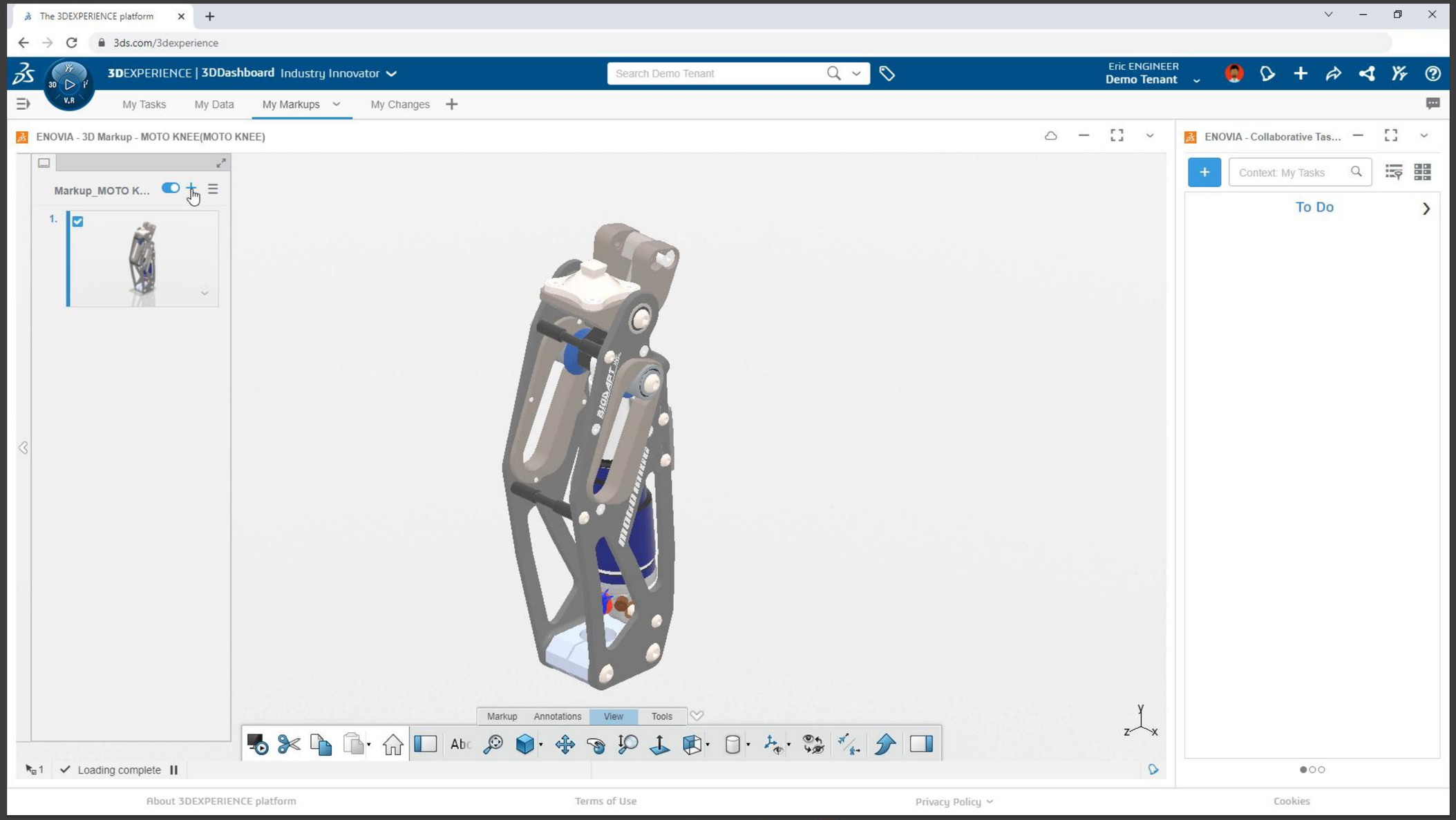

00:10

The 3DEXPERIENCE platform

3ds.com/3dexperience

Sam SUPPLIER, Eric ENGINEER

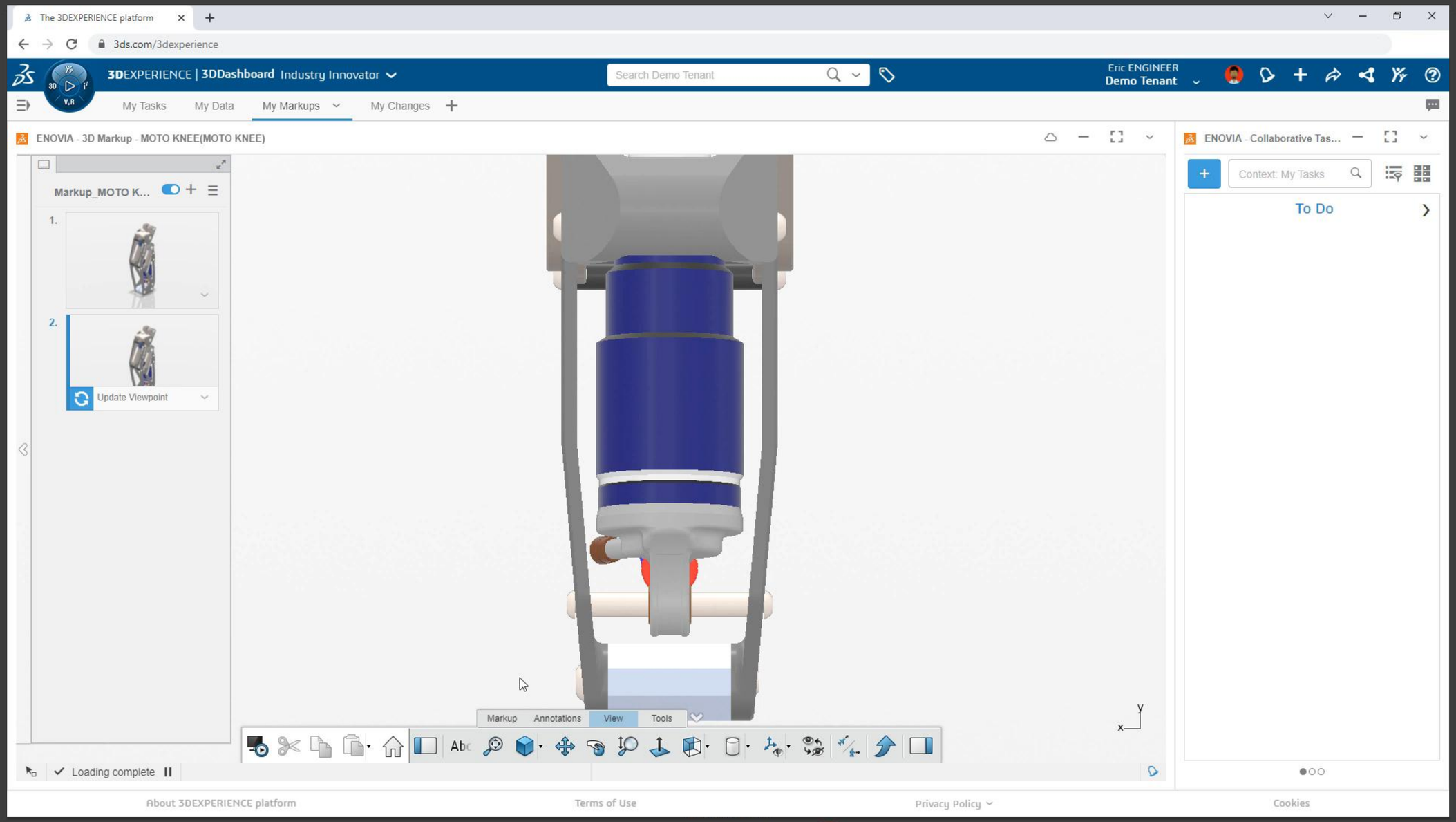

00:10

The 3DEXPERIENCE platform

3ds.com/3dexperience

Sam SUPPLIER, Eric ENGINEER

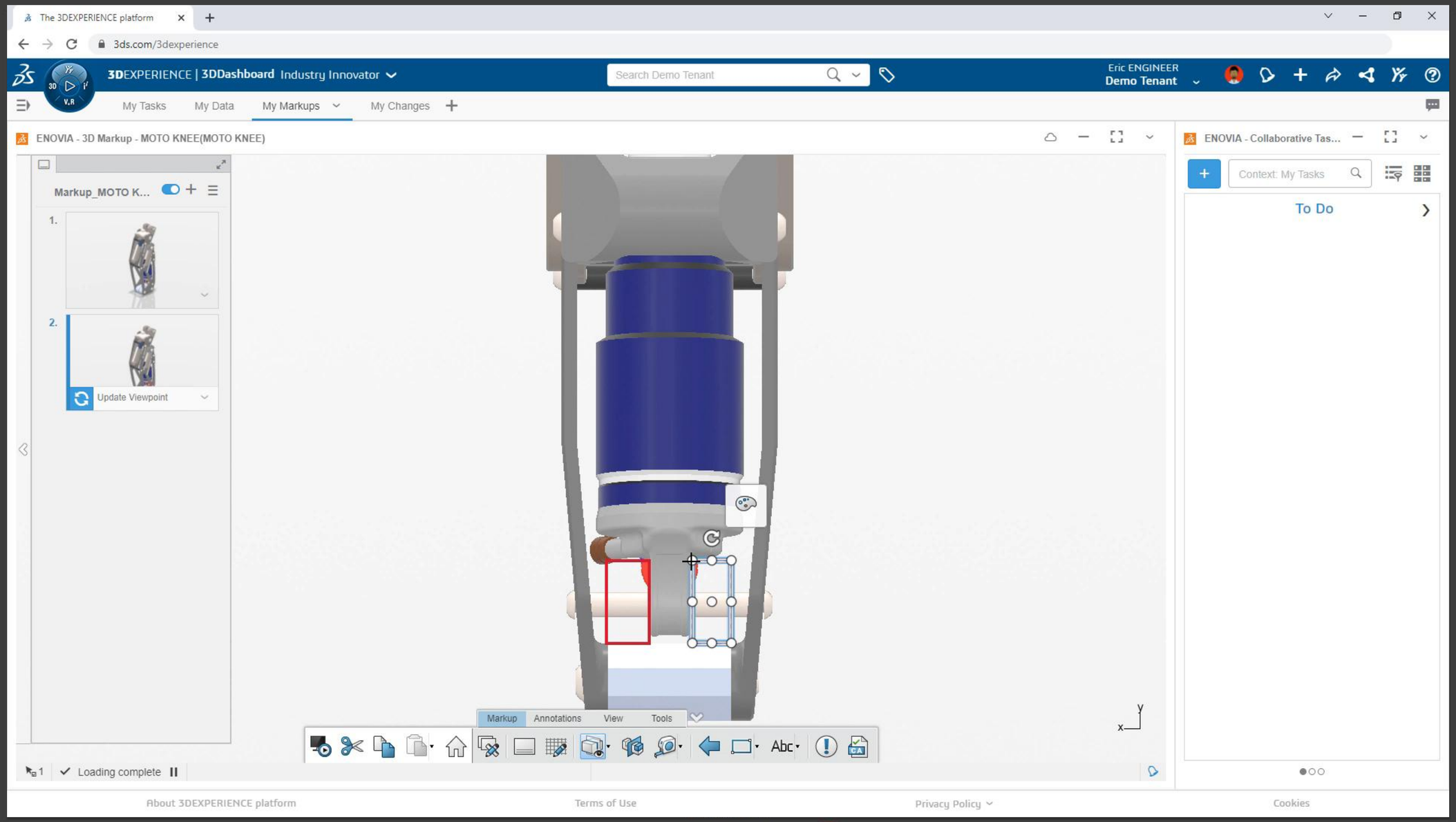

00:10

The 3DEXPERIENCE platform

3ds.com/3dexperience

Sam SUPPLIER, Eric ENGINEER

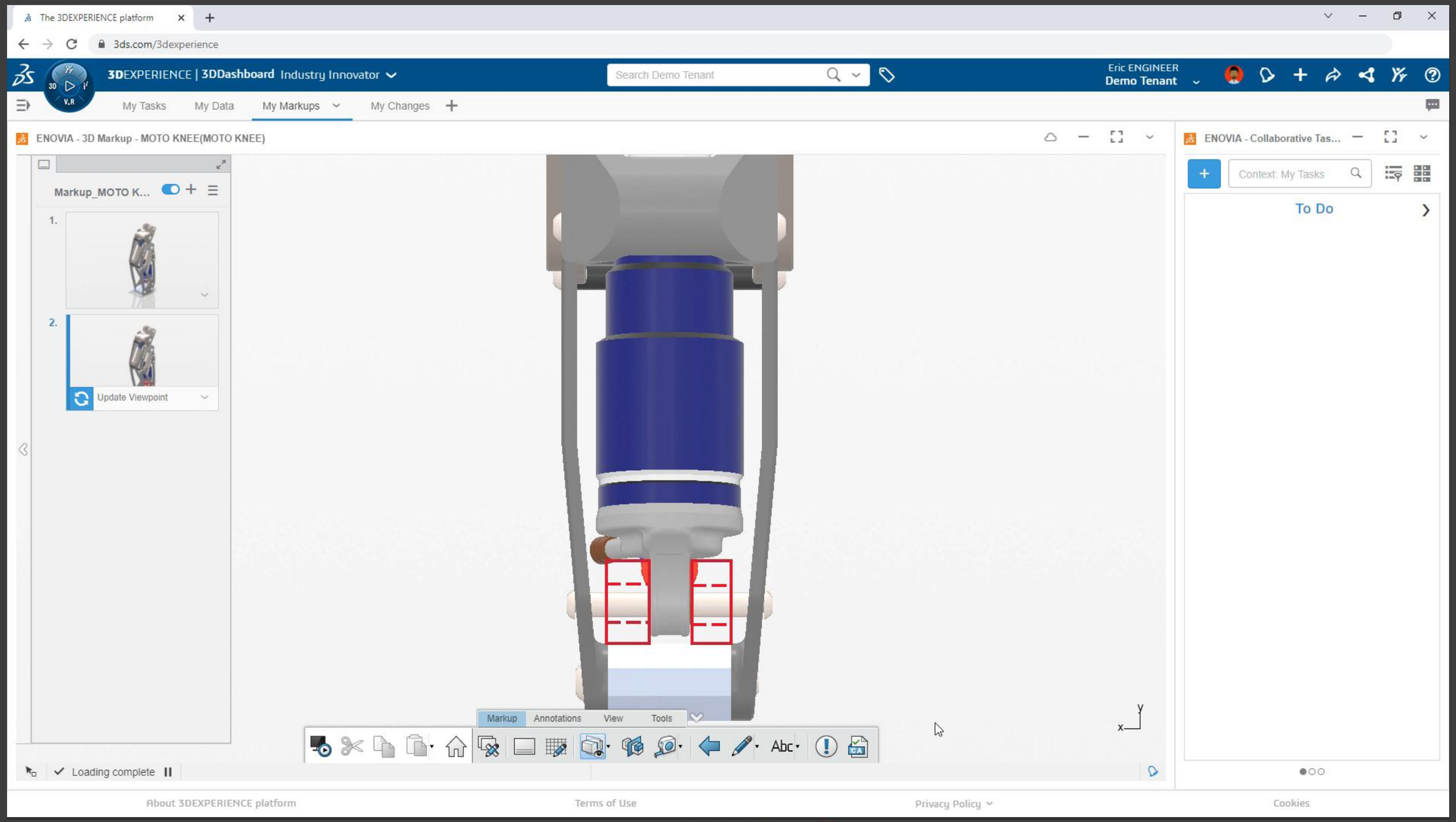

00:10

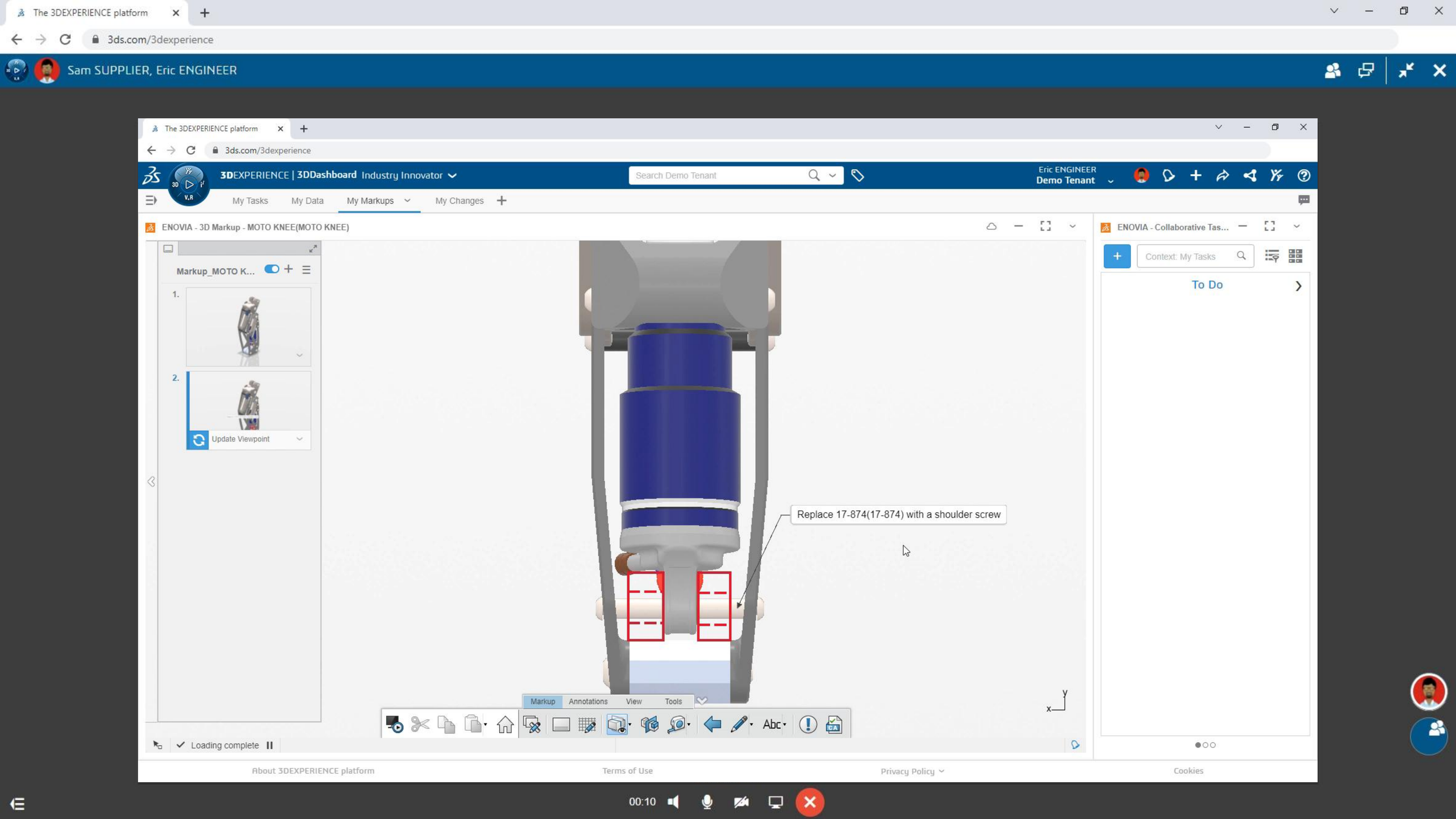
The 3DEXPERIENCE platform
3ds.com/3dexperience
Sam SUPPLIER, Eric ENGINEER
3DEXPERIENCE | 3DDashboard Industry Innovator
Search Demo Tenant
Eric ENGINEER
Demo Tenant
My Tasks
My Data
My Markups
My Changes
ENOVIA - 3D Markup - MOTO KNEE(MOTO KNEE)
Markup_MOTO K...
1.
2.
Update Viewpoint
Replace 17-874(17-874) with a shoulder screw
Markup
Annotations
View
Tools
Loading complete
ENOVIA - Collaborative Tas...
Context: My Tasks
To Do
About 3DEXPERIENCE platform
Terms of Use
Privacy Policy
Cookies
00:10

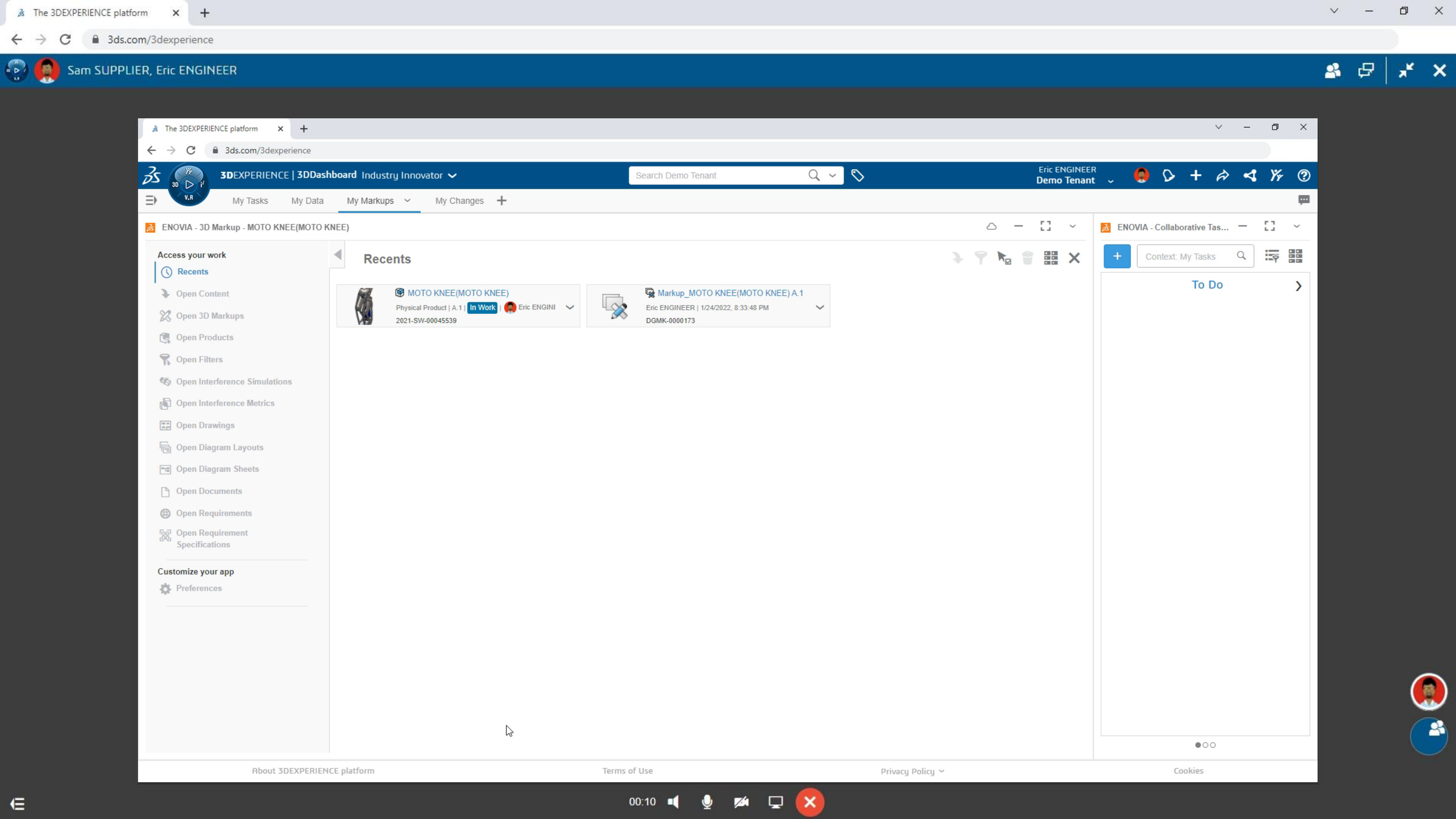
The 3DEXPERIENCE platform
3ds.com/3dexperience
Sam SUPPLIER, Eric ENGINEER
3DEXPERIENCE | 3DDashboard Industry Innovator
Search Demo Tenant
Eric ENGINEER
Demo Tenant
My Tasks
My Data
My Markups
My Changes
ENOVIA - 3D Markup - MOTO KNEE(MOTO KNEE)
Access your work
Recents
Open Content
Open 3D Markups
Open Products
Open Filters
Open Interference Simulations
Open Interference Metrics
Open Drawings
Open Diagram Layouts
Open Diagram Sheets
Open Documents
Open Requirements
Open Requirement Specifications
Customize your app
Preferences
Recents
MOTO KNEE(MOTO KNEE)
Physical Product | A.1 | In Work | Eric ENGINI
2021-SW-00045539
Markup_MOTO KNEE(MOTO KNEE) A.1
Eric ENGINEER | 1/24/2022, 8:33:48 PM
DGMK-0000173
ENOVIA - Collaborative Tas...
Context: My Tasks
To Do
About 3DEXPERIENCE platform
Terms of Use
Privacy Policy
Cookies
00:10

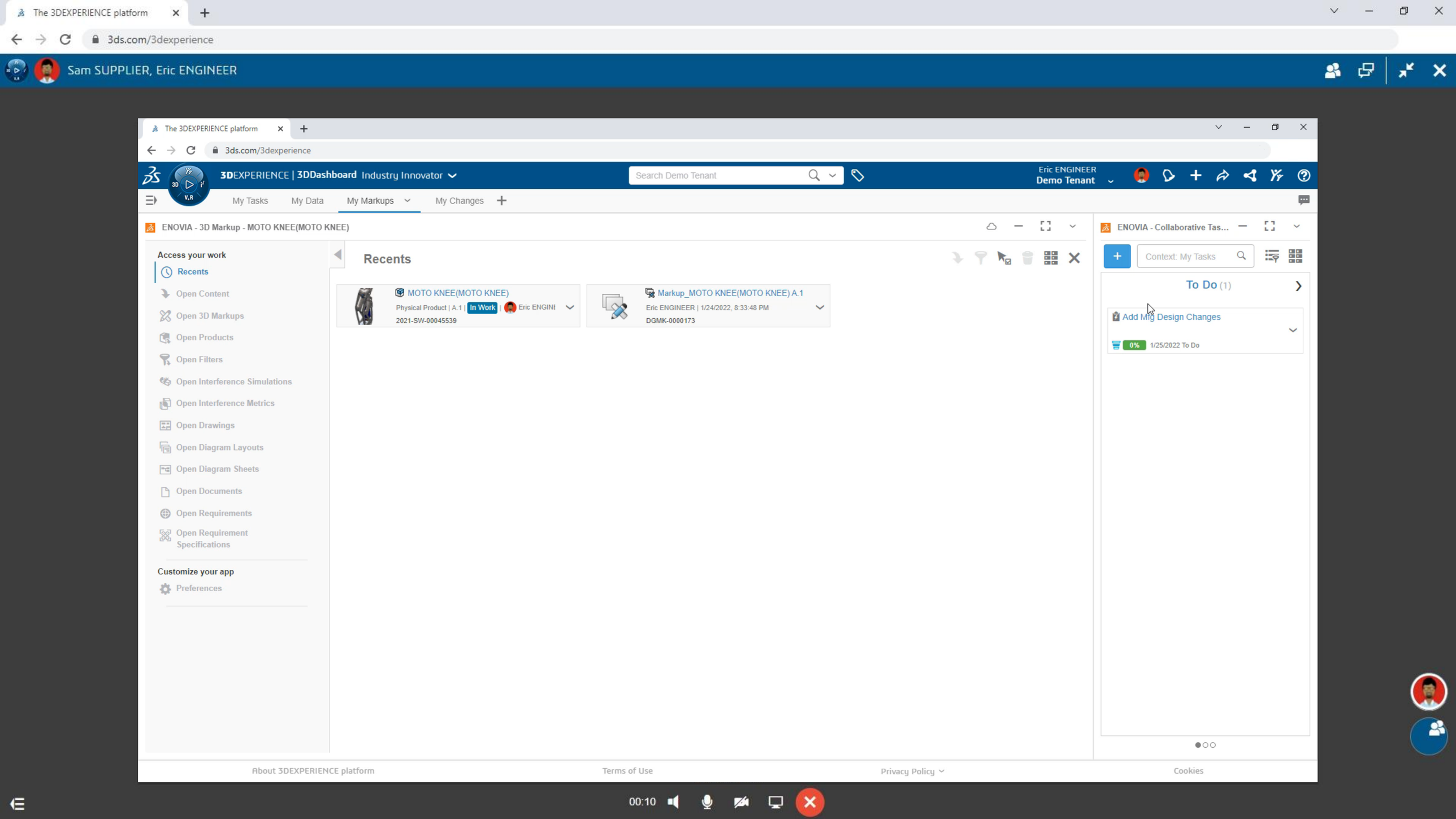
The 3DEXPERIENCE platform
3ds.com/3dexperience
Sam SUPPLIER, Eric ENGINEER
3DEXPERIENCE | 3DDashboard Industry Innovator
Search Demo Tenant
Eric ENGINEER
Demo Tenant
My Tasks
My Data
My Markups
My Changes
ENOVIA - 3D Markup - MOTO KNEE(MOTO KNEE)
Access your work
Recents
Open Content
Open 3D Markups
Open Products
Open Filters
Open Interference Simulations
Open Interference Metrics
Open Drawings
Open Diagram Layouts
Open Diagram Sheets
Open Documents
Open Requirements
Open Requirement Specifications
Customize your app
Preferences
Recents
MOTO KNEE(MOTO KNEE)
Physical Product | A.1 | In Work | Eric ENGINI
2021-SW-00045539
Markup_MOTO KNEE(MOTO KNEE) A.1
Eric ENGINEER | 1/24/2022, 8:33:48 PM
DGMK-0000173
ENOVIA - Collaborative Tas...
Context: My Tasks
To Do (1)
Add Mfg Design Changes
0%
1/25/2022 To Do
About 3DEXPERIENCE platform
Terms of Use
Privacy Policy
Cookies
00:10

DOCUMENT MANAGEMENT

SECURE CLOUD BASED FILE STORAGE FOR ALL PROJECT DATA

COLLABORATION

INTEGRATED COMMUNICATION WITH POWERFUL DESIGN REVIEW TOOLS

DESIGN RELEASE

CHANGE MANAGEMENT

SOLIDWORKS

visiativ

DASSAULT SYSTEMES

SOLIDWORKS | MOTO KNEE.SLDASM [Read-only] | Search MySolidWorks

Edit Component | Insert Components | Mate | Component Preview Window | Linear Component Pattern | Smart Fasteners | Move Component | Show Hidden Components | Assembly Features | Reference Geometry | New Motion Study | Bill of Materials | Exploded View | Instant3D | Update SpeedPak Subassemblies | Take Snapshot | Large Assembly Settings

Assembly | Layout | Sketch | Markup | Evaluate | SOLIDWORKS Add-Ins

- MOTO KNEE (MOTO KNEE)
  - History
  - Sensors
  - Annotations
  - Front Plane
  - Top Plane
  - Right Plane
  - Origin
  - 17-853<1> (FRAME ASSEMBLY)
  - 17-840<1> (TOP PIVOT MOUNT)
  - 17-845<1> (CLEVIS)
  - 17-843<1> (ROD END)
  - 17-862<1> (BRONZE BUSHING - 10 I
  - 17-847<1> (SHAFT-TRACK)
  - 17-846<1> (BUSHING - CLEVIS 13 ID
  - 17-846<2> (BUSHING - CLEVIS 13 ID
  - 17-849<1> (SPACER)
  - 17-849<2> (SPACER)
  - 17-871<1> (FOX DPS SHOCK CYLIDI
  - 17-872<1> (FOX DPS - ROD)
  - TRACK FOLLOWER<3> (YOKE TYPE
  - TRACK FOLLOWER<2> (YOKE TYPE
  - BALL BEARING<5> (8 ID x 22 OD X 7
  - BALL BEARING<6> (8 ID x 22 OD X 7
  - 17-899<2> (LOWER BRACKET)
  - (-) 17-874<2> (LOWER PIN)
  - 17-841<1> (4 HOLE PYRAMID)
  - Hardware
  - (-) 17-900<1> (17-900)
  - Mates
  - DerivedHolePattern1

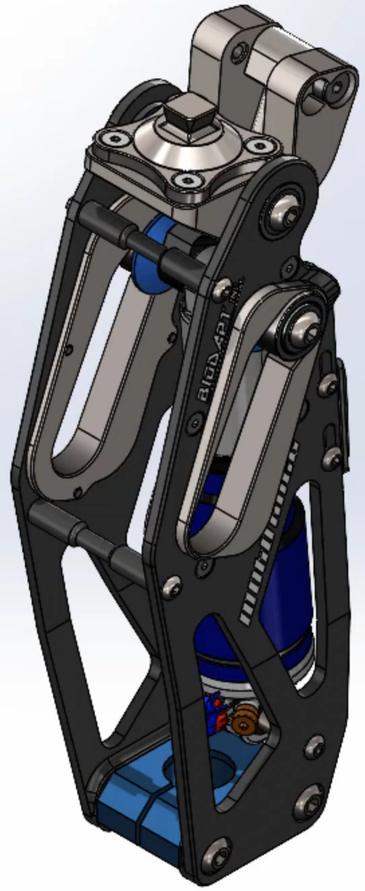

*Isometric

Model | Motion Study 1

3DEXPERIENCE

ENOVIA Collaborative Tasks - Priv... | Search Demo Tenant

Create a task... | Context: My T...

To Do

In Work (1)

Add Mfg Design Changes

10% 1/26/2022 In Work

SOLIDWORKS | Under Defined | Editing Assembly | MMGS

SOLIDWORKS

MOTO KNEE.SLDASM [Read-only]

Search MySolidWorks

Edit Component | Insert Components | Mate | Component Preview Window | Linear Component Pattern | Smart Fasteners | Move Component | Show Hidden Components | Assembly Features | Reference Geometry | New Motion Study | Bill of Materials | Exploded View | Instant3D | Update SpeedPak Subassemblies | Take Snapshot | Large Assembly Settings

Assembly | Layout | Sketch | Markup | Evaluate | SOLIDWORKS Add-Ins

- MOTO KNEE (MOTO KNEE)
  - History
  - Sensors
  - Annotations
  - Front Plane
  - Top Plane
  - Right Plane
  - Origin
  - 17-853<1> (FRAME ASSEMBLY)
  - 17-840<1> (TOP PIVOT MOUNT)
  - 17-845<1> (CLEVIS)
  - 17-843<1> (ROD END)
  - 17-862<1> (BRONZE BUSHING - 10 I
  - 17-847<1> (SHAFT-TRACK)
  - 17-846<1> (BUSHING - CLEVIS 13 ID
  - 17-846<2> (BUSHING - CLEVIS 13 ID
  - 17-849<1> (SPACER)
  - 17-849<2> (SPACER)
  - 17-871<1> (FOX DPS SHOCK CYLIDI
  - 17-872<1> (FOX DPS - ROD)
  - TRACK FOLLOWER<3> (YOKE TYPE
  - TRACK FOLLOWER<2> (YOKE TYPE
  - BALL BEARING<5> (8 ID x 22 OD X 7
  - BALL BEARING<6> (8 ID x 22 OD X 7
  - 17-899<2> (LOWER BRACKET)
  - (-) 17-874<2> (LOWER PIN)
  - 17-841<1> (4 HOLE PYRAMID)
  - Hardware
  - (-) 17-900<1> (17-900)
  - Mates
  - DerivedHolePattern1

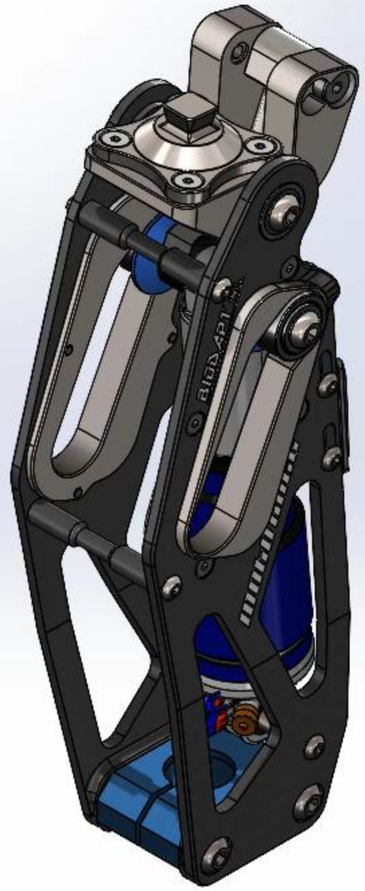

*Isometric

Model | Motion Study 1

3DEXPERIENCE

ENOVIA Collaborative Tasks - Priv...

Search Demo Tenant

Create a task...

To Do

Drop here or type to search...

Priority

Maturity State

In Work

Percent Complete

10%

Actual Start

Tue, Jan 25, 2022

Fixed

Planned End

Wed, Jan 26, 2022

Fixed

Estimated Duration

1

Days

+/-

0

Attachments

Drop here or type to search...

MOTO KNEE(MOTO KNEE)

Markup_MOTO KNEE(MOTO KNEE) A.1

Preview

Remove

Open With

Deliverables

Drop here or type to search...

Modified

Tue, Jan 25, 2022

Repository for File Upload

Close

SOLIDWORKS

Under Defined | Editing Assembly | MMGS

SOLIDWORKS

MOTO KNEE.SLDASM [Read-only]

Search MySolidWorks

Edit Component | Insert Components | Mate | Component Preview Window | Linear Component Pattern | Smart Fasteners | Move Component | Show Hidden Components | Assembly Features | Reference Geometry | New Motion Study | Bill of Materials | Exploded View | Instant3D | Update SpeedPak Subassemblies | Take Snapshot | Large Assembly Settings

Assembly | Layout | Sketch | Markup | Evaluate | SOLIDWORKS Add-Ins

- MOTO KNEE (MOTO KNEE)
  - History
  - Sensors
  - Annotations
  - Front Plane
  - Top Plane
  - Right Plane
  - Origin
  - 17-853<1> (FRAME ASSEMBLY)
  - 17-840<1> (TOP PIVOT MOUNT)
  - 17-845<1> (CLEVIS)
  - 17-843<1> (ROD END)
  - 17-862<1> (BRONZE BUSHING - 10 I
  - 17-847<1> (SHAFT-TRACK)
  - 17-846<1> (BUSHING - CLEVIS 13 ID
  - 17-846<2> (BUSHING - CLEVIS 13 ID
  - 17-849<1> (SPACER)
  - 17-849<2> (SPACER)
  - 17-871<1> (FOX DPS SHOCK CYLIDI
  - 17-872<1> (FOX DPS - ROD)
  - TRACK FOLLOWER<3> (YOKE TYPE
  - TRACK FOLLOWER<2> (YOKE TYPE
  - BALL BEARING<5> (8 ID x 22 OD X 7
  - BALL BEARING<6> (8 ID x 22 OD X 7
  - 17-899<2> (LOWER BRACKET)
  - (-) 17-874<2> (LOWER PIN)
  - 17-841<1> (4 HOLE PYRAMID)
  - Hardware
  - (-) 17-900<1> (17-900)
  - Mates
  - DerivedHolePattern1

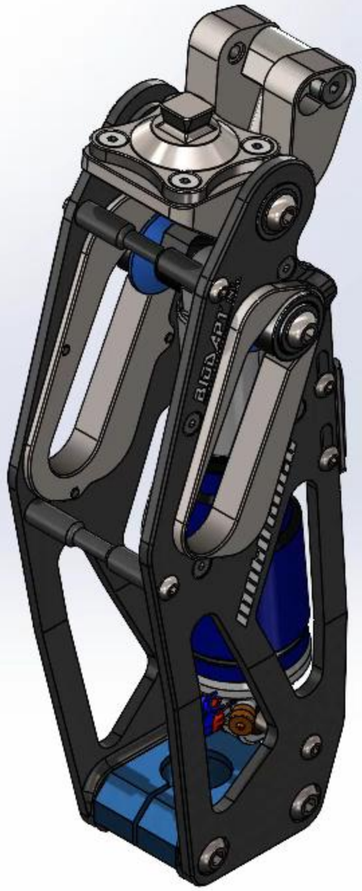

*Isometric

Model | Motion Study 1

3DEXPERIENCE

ENOVIA Collaborative Tasks - Priv...

Search Demo Tenant

Markup_MOTO KNEE(MOTO KNEE) A.1

Markup_MOTO KNEE(MOT...

1.

2.

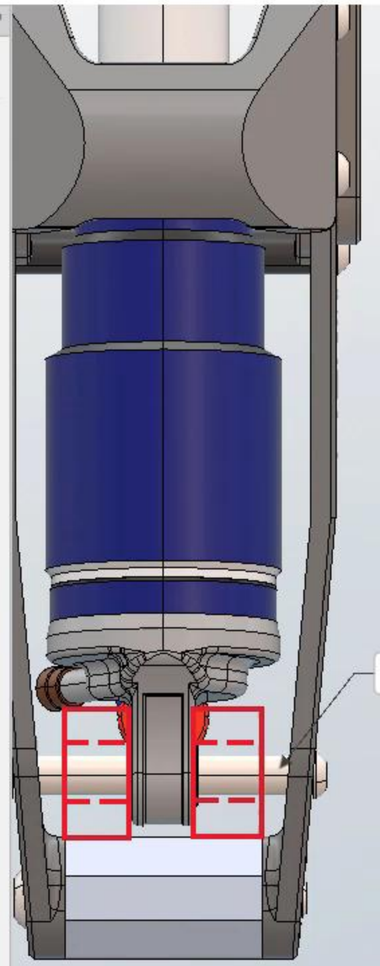

View | Tools

SOLIDWORKS

Under Defined | Editing Assembly | MMGS

SOLIDWORKS

MOTO KNEE.SLDASM [Read-only]

Search MySolidWorks

Edit Component | Insert Components | Mate | Component Preview Window | Linear Component Pattern | Smart Fasteners | Move Component | Show Hidden Components | Assembly Features | Reference Geometry | New Motion Study | Bill of Materials | Exploded View | Instant3D | Update SpeedPak Subassemblies | Take Snapshot | Large Assembly Settings

Assembly | Layout | Sketch | Markup | Evaluate | SOLIDWORKS Add-Ins

- MOTO KNEE (MOTO KNEE)
  - History
  - Sensors
  - Annotations
  - Front Plane
  - Top Plane
  - Right Plane
  - Origin
  - 17-853<1> (FRAME ASSEMBLY)
  - 17-840<1> (TOP PIVOT MOUNT)
  - 17-845<1> (CLEVIS)
  - 17-843<1> (ROD END)
  - 17-862<1> (BRONZE BUSHING - 10 I
  - 17-847<1> (SHAFT-TRACK)
  - 17-846<1> (BUSHING - CLEVIS 13 ID
  - 17-846<2> (BUSHING - CLEVIS 13 ID
  - 17-849<1> (SPACER)
  - 17-849<2> (SPACER)
  - 17-871<1> (FOX DPS SHOCK CYLIDI
  - 17-872<1> (FOX DPS - ROD)
  - TRACK FOLLOWER<3> (YOKE TYPE
  - TRACK FOLLOWER<2> (YOKE TYPE
  - BALL BEARING<5> (8 ID x 22 OD X 7
  - BALL BEARING<6> (8 ID x 22 OD X 7
  - 17-899<2> (LOWER BRACKET)
  - (-) 17-874<2> (LOWER PIN)
  - 17-841<1> (4 HOLE PYRAMID)
  - Hardware
  - (-) 17-900<1> (17-900)
  - Mates
  - DerivedHolePattern1

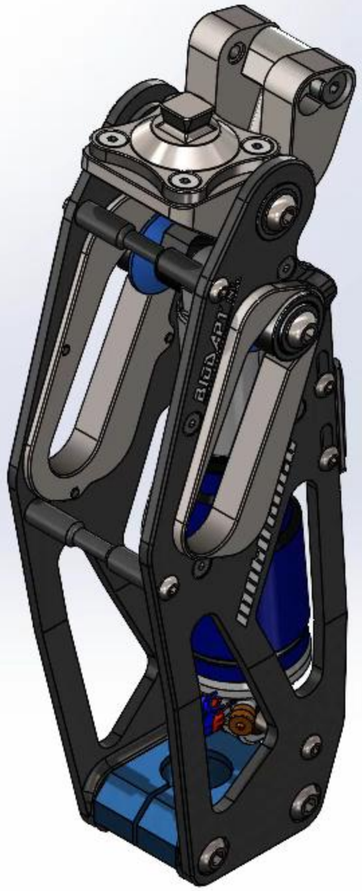

*Isometric

Model | Motion Study 1

3DEXPERIENCE

ENOVIA Collaborative Tasks - Priv...

Search Demo Tenant

Markup_MOTO KNEE(MOTO KNEE) A.1

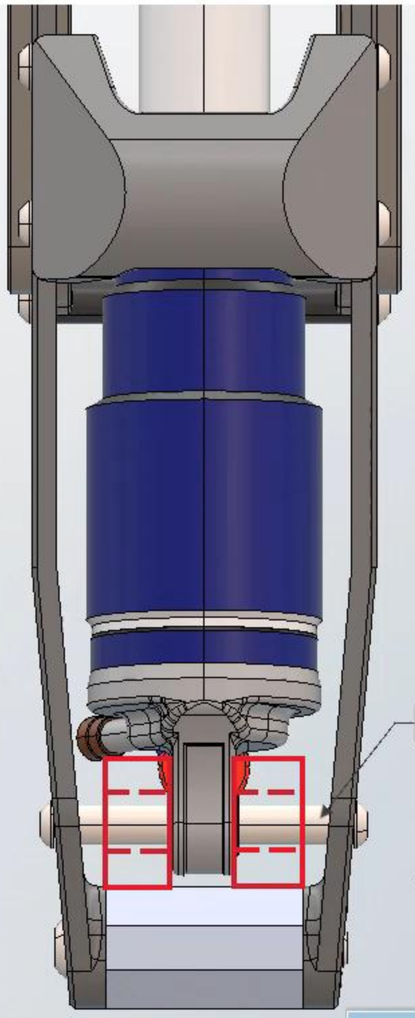

View | Tools

SOLIDWORKS

Under Defined | Editing Assembly | MMGS

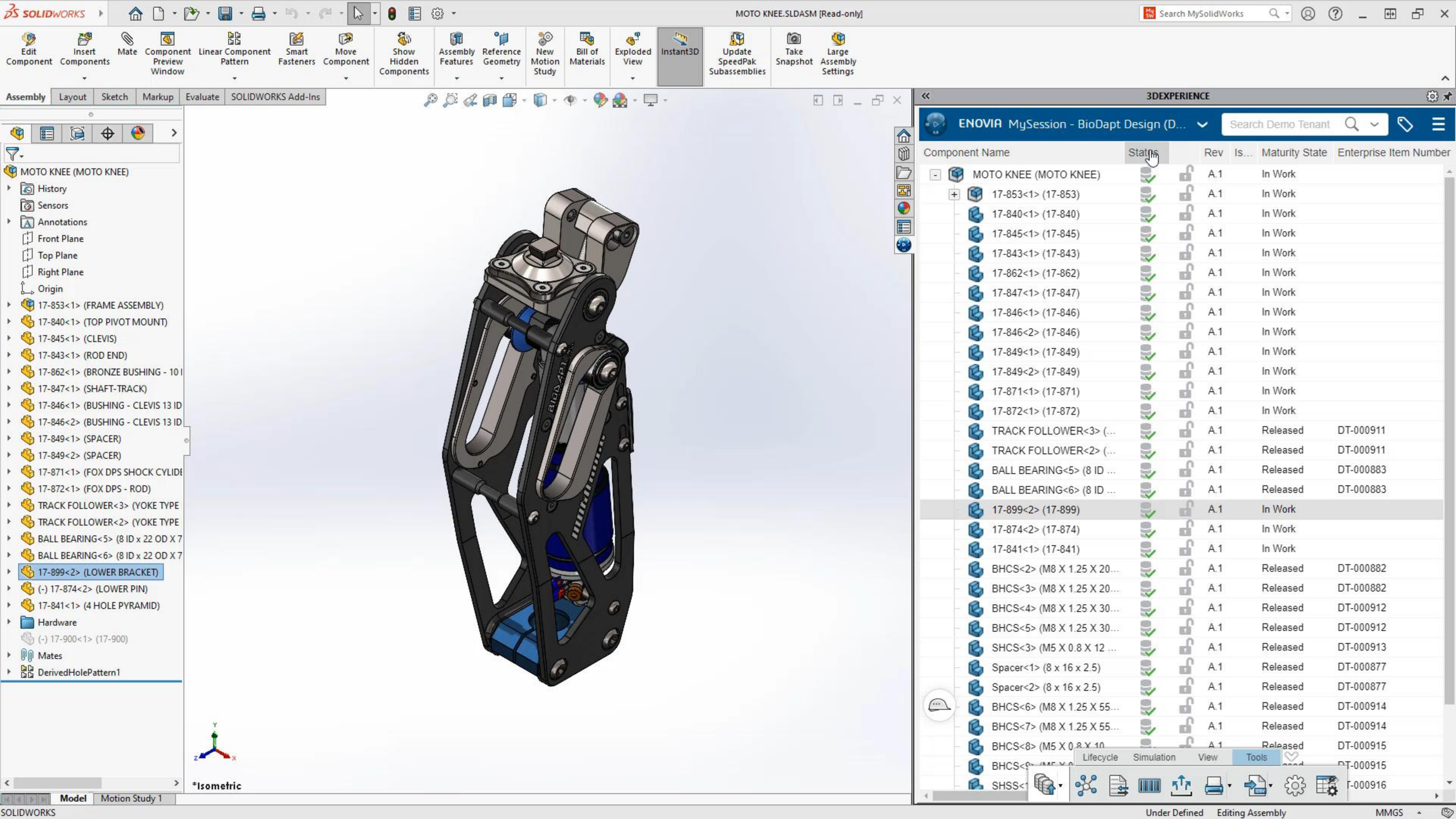
SOLIDWORKS
MOTO KNEE.SLDASM [Read-only]
Search MySolidWorks
Edit Component
Insert Components
Mate
Component Preview Window
Linear Component Pattern
Smart Fasteners
Move Component
Show Hidden Components
Assembly Features
Reference Geometry
New Motion Study
Bill of Materials
Exploded View
Instant3D
Update SpeedPak Subassemblies
Take Snapshot
Large Assembly Settings
Assembly
Layout
Sketch
Markup
Evaluate
SOLIDWORKS Add-Ins
MOTO KNEE (MOTO KNEE)
History
Sensors
Annotations
Front Plane
Top Plane
Right Plane
Origin
17-853<1> (FRAME ASSEMBLY)
17-840<1> (TOP PIVOT MOUNT)
17-845<1> (CLEVIS)
17-843<1> (ROD END)
17-862<1> (BRONZE BUSHING - 10 I
17-847<1> (SHAFT-TRACK)
17-846<1> (BUSHING - CLEVIS 13 ID
17-846<2> (BUSHING - CLEVIS 13 ID
17-849<1> (SPACER)
17-849<2> (SPACER)
17-871<1> (FOX DPS SHOCK CYLIDE
17-872<1> (FOX DPS - ROD)
TRACK FOLLOWER<3> (YOKE TYPE
TRACK FOLLOWER<2> (YOKE TYPE
BALL BEARING<5> (8 ID x 22 OD X 7
BALL BEARING<6> (8 ID x 22 OD X 7
17-899<2> (LOWER BRACKET)
(-) 17-874<2> (LOWER PIN)
17-841<1> (4 HOLE PYRAMID)
Hardware
(-) 17-900<1> (17-900)
Mates
DerivedHolePattern1
*Isometric
Model
Motion Study 1
3DEXPERIENCE
ENOVIA MySession - BioDapt Design (D...
Search Demo Tenant
Component Name
Status
Rev
Is...
Maturity State
Enterprise Item Number
MOTO KNEE (MOTO KNEE) A.1 In Work
17-853<1> (17-853) A.1 In Work
17-840<1> (17-840) A.1 In Work
17-845<1> (17-845) A.1 In Work
17-843<1> (17-843) A.1 In Work
17-862<1> (17-862) A.1 In Work
17-847<1> (17-847) A.1 In Work
17-846<1> (17-846) A.1 In Work
17-846<2> (17-846) A.1 In Work
17-849<1> (17-849) A.1 In Work
17-849<2> (17-849) A.1 In Work
17-871<1> (17-871) A.1 In Work
17-872<1> (17-872) A.1 In Work
TRACK FOLLOWER<3> (... A.1 Released DT-000911
TRACK FOLLOWER<2> (... A.1 Released DT-000911
BALL BEARING<5> (8 ID ... A.1 Released DT-000883
BALL BEARING<6> (8 ID ... A.1 Released DT-000883
17-899<2> (17-899) A.1 In Work
17-874<2> (17-874) A.1 In Work
17-841<1> (17-841) A.1 In Work
BHCS<2> (M8 X 1.25 X 20... A.1 Released DT-000882
BHCS<3> (M8 X 1.25 X 20... A.1 Released DT-000882
BHCS<4> (M8 X 1.25 X 30... A.1 Released DT-000912
BHCS<5> (M8 X 1.25 X 30... A.1 Released DT-000912
SHCS<3> (M5 X 0.8 X 12 ... A.1 Released DT-000913
Spacer<1> (8 x 16 x 2.5) A.1 Released DT-000877
Spacer<2> (8 x 16 x 2.5) A.1 Released DT-000877
BHCS<6> (M8 X 1.25 X 55... A.1 Released DT-000914
BHCS<7> (M8 X 1.25 X 55... A.1 Released DT-000914
Lifecycle
Simulation
View
Tools
SOLIDWORKS
Under Defined
Editing Assembly
MMGS

SOLIDWORKS | MOTO KNEE.SLDASM [Read-only] | Search MySolidWorks

Edit Component | Insert Components | Mate | Component Preview Window | Linear Component Pattern | Smart Fasteners | Move Component | Show Hidden Components | Assembly Features | Reference Geometry | New Motion Study | Bill of Materials | Exploded View | Instant3D | Update SpeedPak Subassemblies | Take Snapshot | Large Assembly Settings

Assembly | Layout | Sketch | Markup | Evaluate | SOLIDWORKS Add-Ins

- MOTO KNEE (MOTO KNEE)
  - History
  - Sensors
  - Annotations
  - Front Plane
  - Top Plane
  - Right Plane
  - Origin
  - 17-853<1> (FRAME ASSEMBLY)
  - 17-840<1> (TOP PIVOT MOUNT)
  - 17-845<1> (CLEVIS)
  - 17-843<1> (ROD END)
  - 17-862<1> (BRONZE BUSHING - 10 I
  - 17-847<1> (SHAFT-TRACK)
  - 17-846<1> (BUSHING - CLEVIS 13 ID
  - 17-846<2> (BUSHING - CLEVIS 13 ID
  - 17-849<1> (SPACER)
  - 17-849<2> (SPACER)
  - 17-871<1> (FOX DPS SHOCK CYLIDI
  - 17-872<1> (FOX DPS - ROD)
  - TRACK FOLLOWER<3> (YOKE TYPE
  - TRACK FOLLOWER<2> (YOKE TYPE
  - BALL BEARING<5> (8 ID x 22 OD X 7
  - BALL BEARING<6> (8 ID x 22 OD X 7
  - 17-899<2> (LOWER BRACKET)
  - (-) 17-874<2> (LOWER PIN)
  - 17-841<1> (4 HOLE PYRAMID)
  - Hardware
  - (-) 17-900<1> (17-900)
  - Mates
  - DerivedHolePattern1

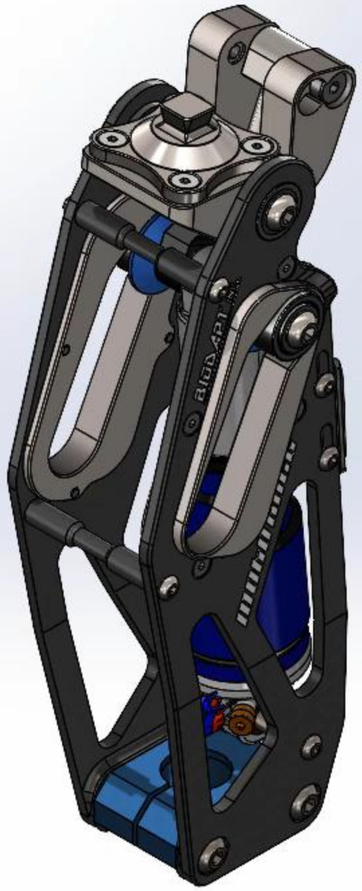

*Isometric

Model | Motion Study 1

3DEXPERIENCE

ENOVIA Relations - All Relations (... | Search Demo Tenant

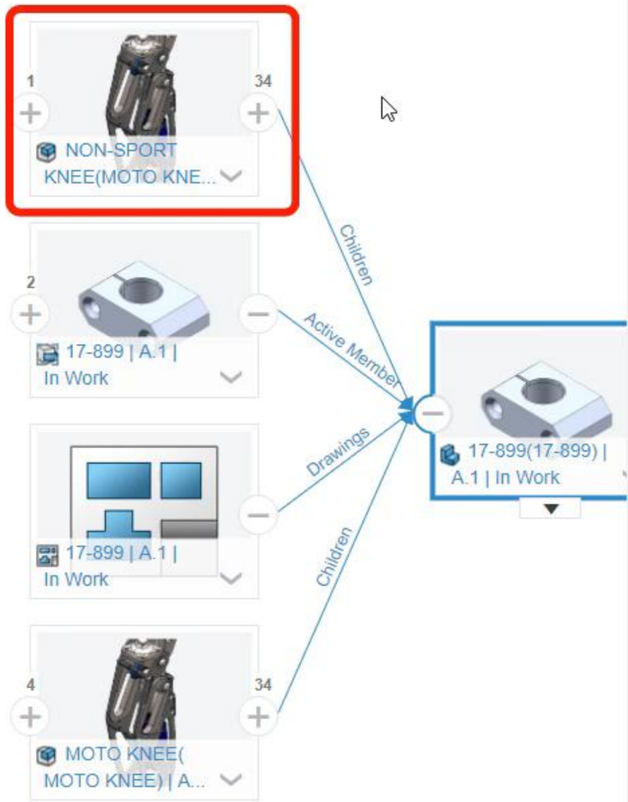

SOLIDWORKS | Under Defined | Editing Assembly | MMGS

MOTO KNEE - Sheet1 [Read-only]

Search MySolidWorks

Surface Finish | Geometric Tolerance | Blocks | Center Mark | Revision Symbol | Tables
Weld Symbol | Datum Feature | Centerline | Revision Cloud
Hole Callout | Datum Target | Area Hatch/Fill

Sheet Format

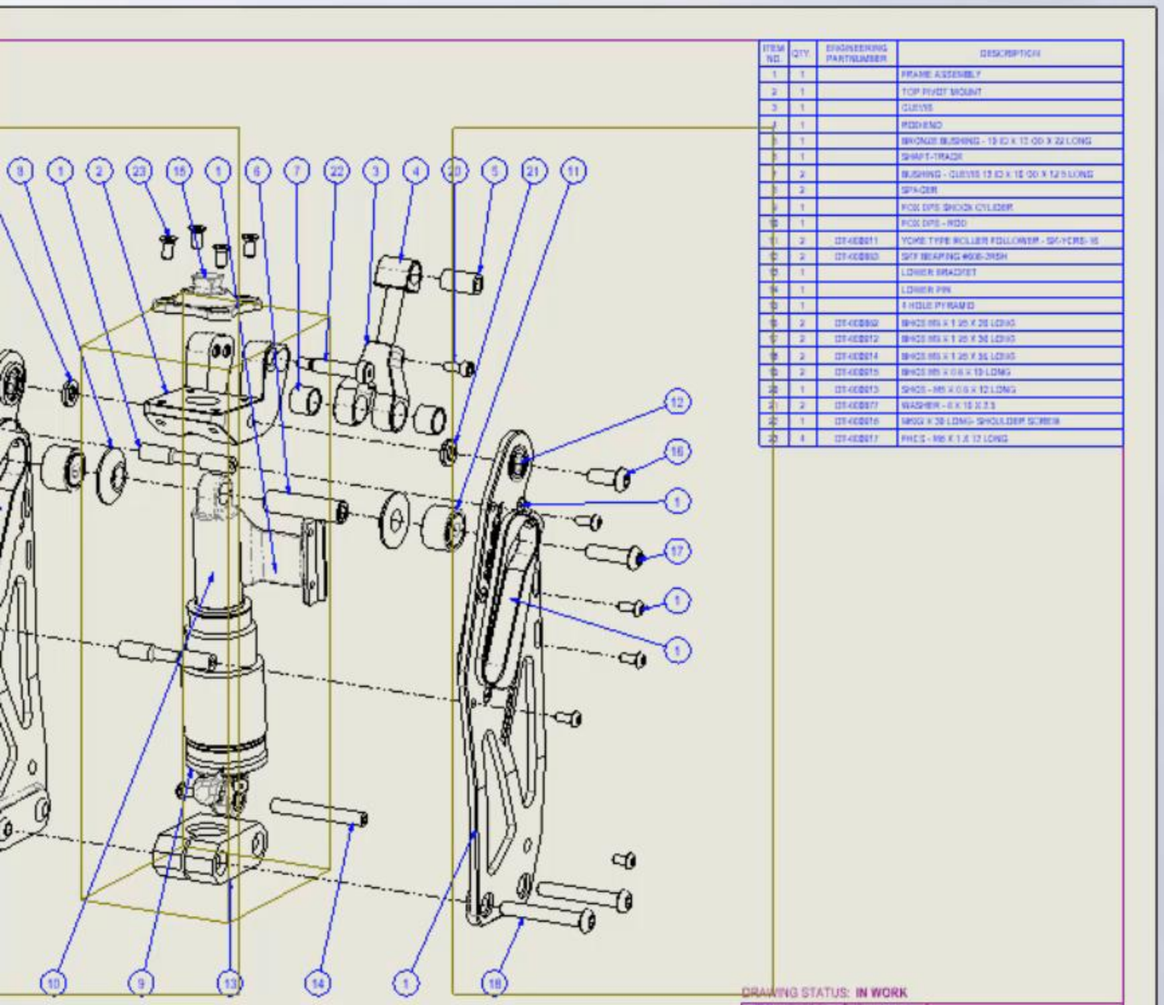

3DEXPERIENCE

ENOVIA MySession - BioDapt Design (D...

Search Demo Tenant

Component Name	Status	Rev	Is...	Maturity State	Enterprise Item Number
MOTO KNEE		A.1		In Work	
MOTO KNEE (MOTO KNEE)		A.1		In Work	
		A.1		In Work	
		A.1		In Work	
		A.1		In Work	
		A.1		In Work	
		A.1		In Work	
		A.1		In Work	
		A.1		In Work	
17-833-L<2> (17-...		A.1		In Work	
17-838<1> (Left)		A.1		In Work	
17-838<2> (Right)		A.1		In Work	
17-835<1> (17-835)		A.1		In Work	
17-836<1> (17-836)		A.1		In Work	
17-836<2> (17-836)		A.1		In Work	
FHCS<1> (M4 X 0...		A.1		Released	DT-000909
FHCS<2> (M4 X 0...		A.1		Released	DT-000909
FHCS<3> (M4 X 0...		A.1		Released	DT-000909
FHCS<4> (M4 X 0...		A.1		Released	DT-000909
FHCS<5> (M4 X 0...		A.1		Released	DT-000909
FHCS<6> (M4 X 0...		A.1		Released	DT-000909
FHCS<7> (M4 X 0...		A.1		Released	DT-000909
FHCS<8> (M4 X 0...		A.1		Released	DT-000909

Expand all
Collapse all
Save
Save with Options
Lock
Maturity
New Revision

MOTO KNEE - Sheet1 [Read-only]

Search MySolidWorks

Surface Finish | Weld Symbol | Hole Callout | Geometric Tolerance | Datum Feature | Datum Target | Blocks | Center Mark | Centerline | Area Hatch/Fill | Revision Symbol | Revision Cloud | Tables

Sheet Format

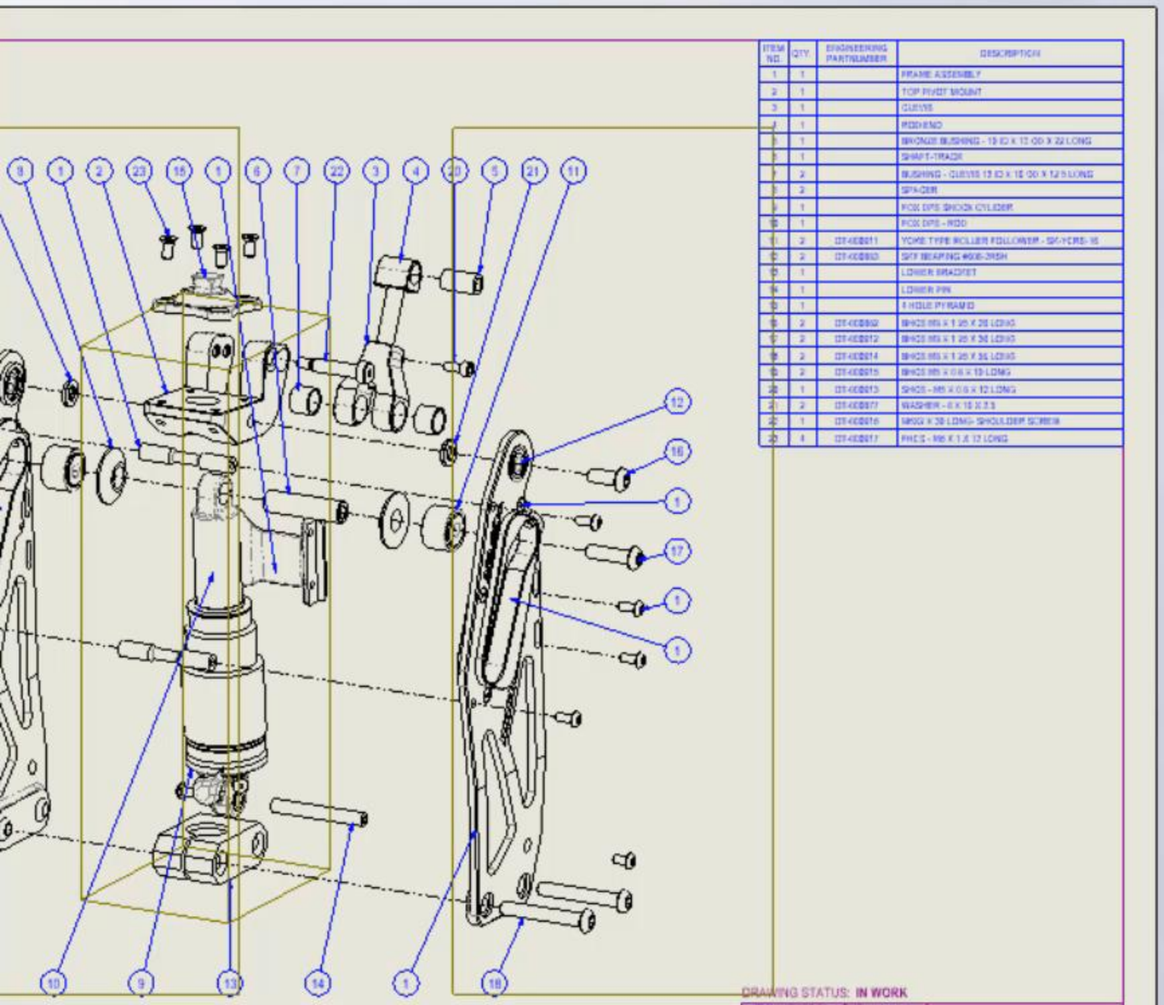

3DEXPERIENCE

ENOVIA MySession - BioDapt Design (D...

Search Demo Tenant

Component Name	Status		Rev	Is...	Maturity State	Enterprise Item Number
MOTO KNEE			A.1	+	In Work	
MOTO KNEE (MOTO KNEE)			A.1	+	In Work	
17-847<1> (17-847)			A.1		In Work	
17-843<1> (17-843)			A.1		In Work	
17-846<1> (17-846)			A.1		In Work	
17-849<2> (17-849)			A.1		In Work	
17-846<2> (17-846)			A.1		In Work	
17-853<1> (17-853)			A.1		In Work	
17-833-R<1> (17-...			A.1		In Work	
17-833-L<2> (17-...			A.1		In Work	
17-838<1> (Left)			A.1		In Work	
17-838<2> (Right)			A.1		In Work	
17-835<1> (17-835)			A.1		In Work	
17-836<1> (17-836)			A.1		In Work	
17-836<2> (17-836)			A.1		In Work	
FHCS<1> (M4 X 0...			A.1		Released	DT-000909
FHCS<2> (M4 X 0...			A.1		Released	DT-000909
FHCS<3> (M4 X 0...			A.1		Released	DT-000909
FHCS<4> (M4 X 0...			A.1		Released	DT-000909
FHCS<5> (M4 X 0...			A.1		Released	DT-000909
FHCS<6> (M4 X 0...			A.1		Released	DT-000909
FHCS<7> (M4 X 0...			A.1		Released	DT-000909
FHCS<8> (M4 X 0...			A.1		Released	DT-000909

Released

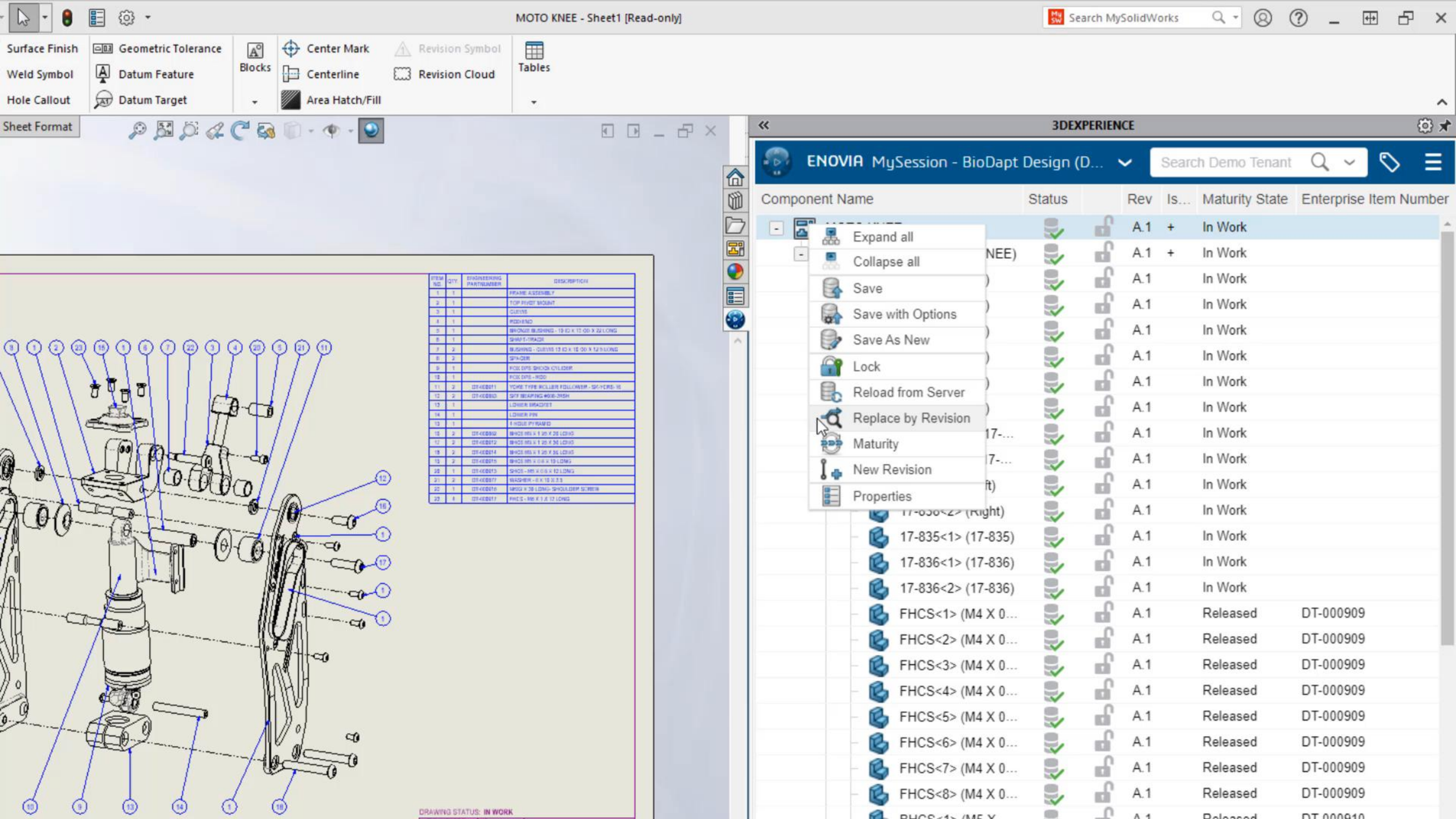
MOTO KNEE - Sheet1 [Read-only]
Search MySolidWorks
Surface Finish
Weld Symbol
Hole Callout
Geometric Tolerance
Datum Feature
Datum Target
Blocks
Center Mark
Centerline
Area Hatch/Fill
Revision Symbol
Revision Cloud
Tables
Sheet Format
3DEXPERIENCE
ENOVIA MySession - BioDapt Design (D...
Search Demo Tenant
Component Name
Status
Rev
Is...
Maturity State
Enterprise Item Number
Expand all
Collapse all
Save
Save with Options
Save As New
Lock
Reload from Server
Replace by Revision
Maturity
New Revision
Properties
A.1 + In Work
17-835<1> (17-835)
17-836<1> (17-836)
17-836<2> (17-836)
FHCS<1> (M4 X 0...
FHCS<2> (M4 X 0...
FHCS<3> (M4 X 0...
FHCS<4> (M4 X 0...
FHCS<5> (M4 X 0...
FHCS<6> (M4 X 0...
FHCS<7> (M4 X 0...
FHCS<8> (M4 X 0...
Released
DT-000909
DRAWING STATUS: IN WORK

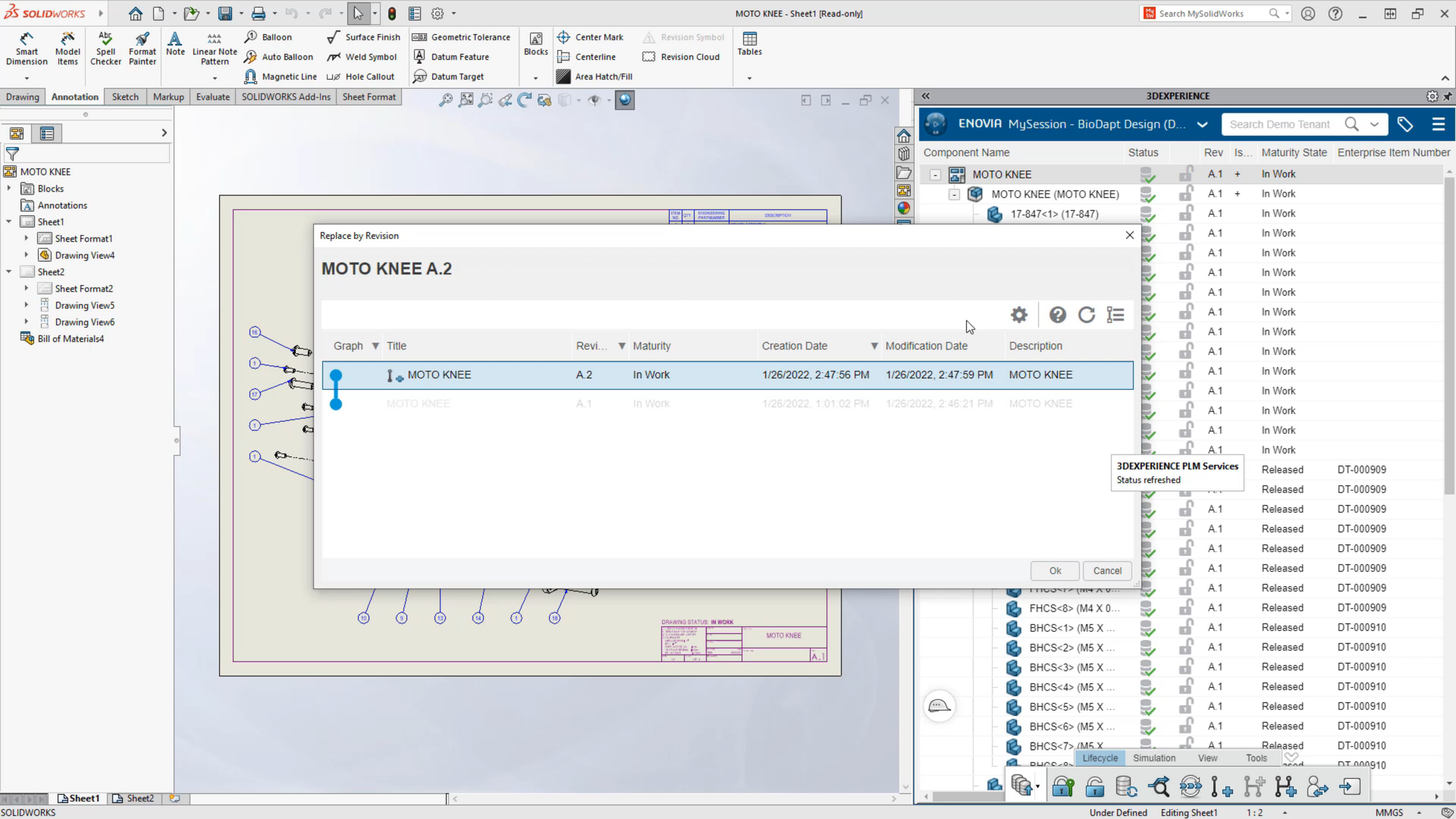
MOTO KNEE - Sheet1 [Read-only]
Search MySolidWorks
Smart Dimension
Model Items
Spell Checker
Format Painter
Note
Linear Note Pattern
Balloon
Auto Balloon
Magnetic Line
Surface Finish
Weld Symbol
Hole Callout
Geometric Tolerance
Datum Feature
Datum Target
Blocks
Center Mark
Centerline
Area Hatch/Fill
Revision Symbol
Revision Cloud
Tables
Drawing
Annotation
Sketch
Markup
Evaluate
SOLIDWORKS Add-Ins
Sheet Format
MOTO KNEE
Blocks
Annotations
Sheet1
Sheet Format1
Drawing View4
Sheet2
Sheet Format2
Drawing View5
Drawing View6
Bill of Materials4
Replace by Revision
MOTO KNEE A.2
Graph
Title
Revi...
Maturity
Creation Date
Modification Date
Description
MOTO KNEE
A.2
In Work
1/26/2022, 2:47:56 PM
1/26/2022, 2:47:59 PM
MOTO KNEE
MOTO KNEE
A.1
In Work
1/26/2022, 1:01:02 PM
1/26/2022, 2:46:21 PM
MOTO KNEE
Ok
Cancel
3DEXPERIENCE
ENOVIA MySession - BioDapt Design (D...
Search Demo Tenant
Component Name
Status
Rev
Is...
Maturity State
Enterprise Item Number
MOTO KNEE
MOTO KNEE (MOTO KNEE)
17-847<1> (17-847)
In Work
Released
3DEXPERIENCE PLM Services
Status refreshed
FHCS<8> (M4 X 0...
BHCS<1> (M5 X ...
BHCS<2> (M5 X ...
BHCS<3> (M5 X ...
BHCS<4> (M5 X ...
BHCS<5> (M5 X ...
BHCS<6> (M5 X ...
BHCS<7> (M5 X ...
Lifecycle
Simulation
View
Tools
DRAWING STATUS: IN WORK
Sheet1
Sheet2
SOLIDWORKS
Under Defined
Editing Sheet1
1 : 2
MMGS

SOLIDWORKS

MOTO KNEE - Sheet1 [Read-only]

Search MySolidWorks

Smart Dimension | Model Items | Spell Checker | Format Painter | Note | Linear Note Pattern | Balloon | Auto Balloon | Magnetic Line | Surface Finish | Weld Symbol | Hole Callout | Geometric Tolerance | Datum Feature | Datum Target | Blocks | Center Mark | Centerline | Area Hatch/Fill | Revision Symbol | Revision Cloud | Tables

Drawing | Annotation | Sketch | Markup | Evaluate | SOLIDWORKS Add-Ins | Sheet Format

MOTO KNEE
- Blocks
- Annotations
- Sheet1
  - Sheet Format1
  - Drawing View4
- Sheet2
  - Sheet Format2
  - Drawing View5
  - Drawing View6
- Bill of Materials4

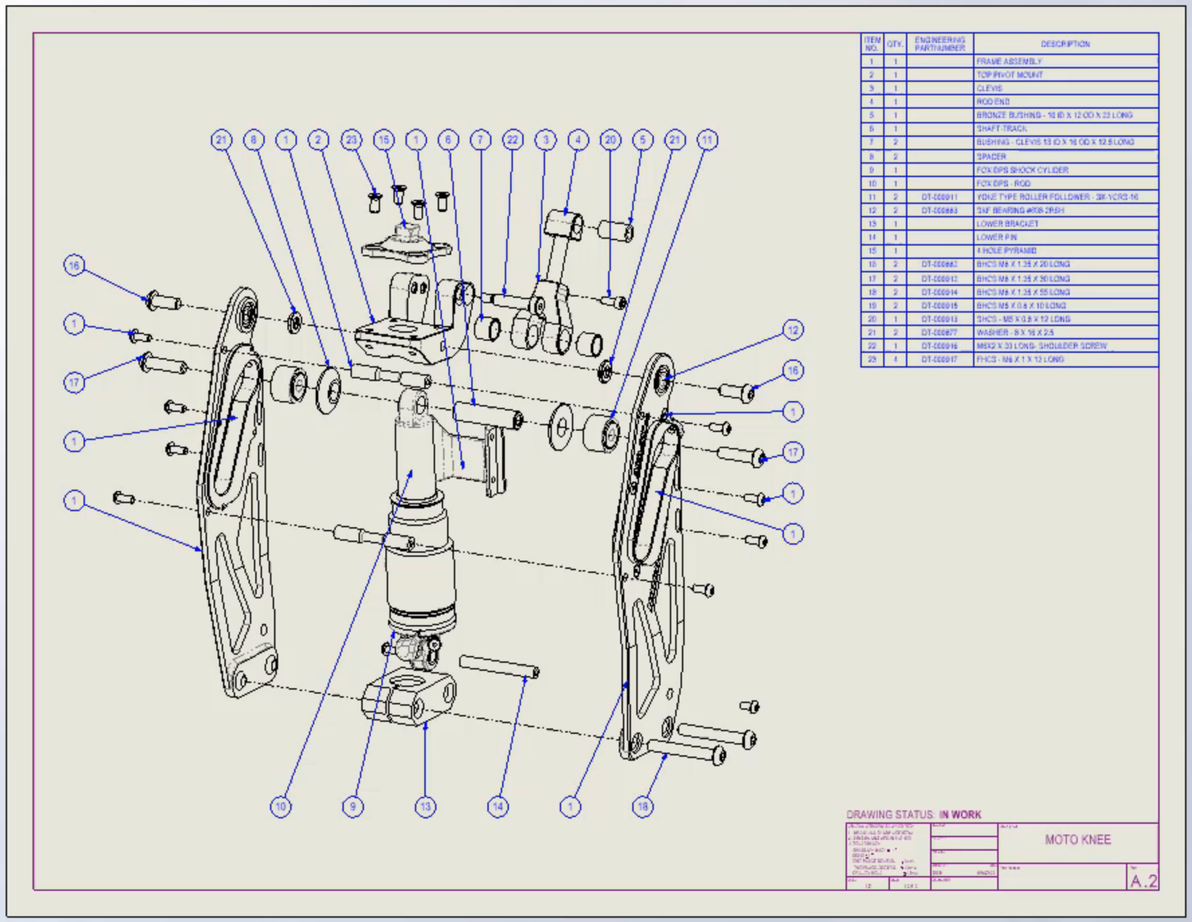

Sheet1 | Sheet2

3DEXPERIENCE

ENOVIA MySession - BioDapt Design (D...

Search Demo Tenant

Component Name	Status	Rev	Is...	Maturity State	Enterprise Item Number
MOTO KNEE		A.2		In Work	
MOTO KNEE (MOTO KNEE)		A.2		In Work	
SHSS<1> (M6x2 X 30 ...		A.1		Released	DT-000916
BHCS<9> (M5 X 0.8 X...		A.1		Released	DT-000915
BHCS<7> (M8 X 1.25 ...		A.1		Released	DT-000914
SHCS<3> (M5 X 0.8 X...		A.1		Released	DT-000913
Spacer<1> (8 x 16 x 2.5)		A.1		Released	DT-000877
Spacer<2> (8 x 16 x 2.5)		A.1		Released	DT-000877
BHCS<6> (M8 X 1.25 ...		A.1		Released	DT-000914
FHCS<1> (M6 X 1 X 1...		A.1		Released	DT-000917
BHCS<8> (M5 X 0.8 X...		A.1		Released	DT-000915
17-846<2> (17-846)		A.1		In Work	
17-874<2> (17-874)		A.1		In Work	
TRACK FOLLOWER<...		A.1		Released	DT-000911
17-849<2> (17-849)		A.1		In Work	
17-871<1> (17-871)		A.1		In Work	
17-849<1> (17-849)		A.1		In Work	
BALL BEARING<5> (8...		A.1		Released	DT-000883
BALL BEARING<6> (8...		A.1		Released	DT-000883
17-872<1> (17-872)		A.1		In Work	
17-899<2> (17-899)		A.1		In Work	
TRACK		A.1		Released	DT-000911
17-841<1> (17-841)		A.1		In Work	
BHCS<2> (M8 X 1.25 ...		A.1		Released	DT-000882
BHCS<3> (M8 X 1.25 ...		A.1		Released	DT-000882
BHCS<5> (M8 X 1.25 ...		A.1		Released	DT-000912
BHCS<4> (M8 X 1.25 ...		A.1		Released	DT-000912
17-853<1> (17-853)		A.1		In Work	
17-833-R<1> (17-...		A.1		In Work	
17-833-L<2> (17-		A.1		In Work	

17-899<2> (17-899)

Lifecycle | Simulation | View | Tools

SOLIDWORKS

595.337mm | 167.509mm | 0mm | Under Defined | Editing Sheet1 | 1 : 2 | MMGS

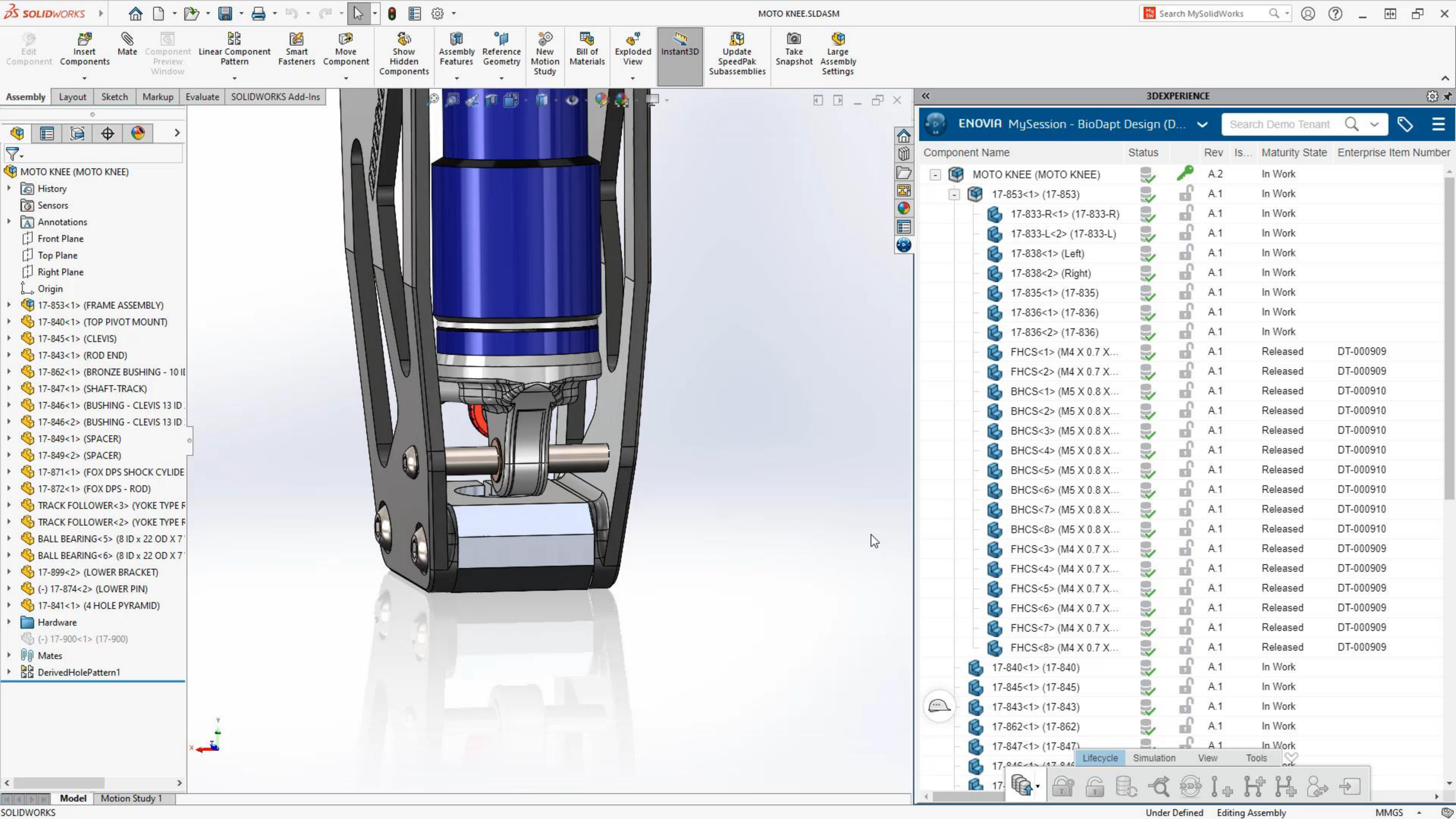
MOTO KNEE.SLDASM
Search MySolidWorks
Edit Component
Insert Components
Mate
Component Preview Window
Linear Component Pattern
Smart Fasteners
Move Component
Show Hidden Components
Assembly Features
Reference Geometry
New Motion Study
Bill of Materials
Exploded View
Instant3D
Update SpeedPak Subassemblies
Take Snapshot
Large Assembly Settings
Assembly
Layout
Sketch
Markup
Evaluate
SOLIDWORKS Add-Ins
MOTO KNEE (MOTO KNEE)
History
Sensors
Annotations
Front Plane
Top Plane
Right Plane
Origin
17-853<1> (FRAME ASSEMBLY)
17-840<1> (TOP PIVOT MOUNT)
17-845<1> (CLEVIS)
17-843<1> (ROD END)
17-862<1> (BRONZE BUSHING - 10 ID
17-847<1> (SHAFT-TRACK)
17-846<1> (BUSHING - CLEVIS 13 ID
17-846<2> (BUSHING - CLEVIS 13 ID
17-849<1> (SPACER)
17-849<2> (SPACER)
17-871<1> (FOX DPS SHOCK CYLIDE
17-872<1> (FOX DPS - ROD)
TRACK FOLLOWER<3> (YOKE TYPE F
TRACK FOLLOWER<2> (YOKE TYPE F
BALL BEARING<5> (8 ID x 22 OD X 7
BALL BEARING<6> (8 ID x 22 OD X 7
17-899<2> (LOWER BRACKET)
(-) 17-874<2> (LOWER PIN)
17-841<1> (4 HOLE PYRAMID)
Hardware
(-) 17-900<1> (17-900)
Mates
DerivedHolePattern1
Model
Motion Study 1
3DEXPERIENCE
ENOVIA MySession - BioDapt Design (D...
Search Demo Tenant
Component Name
Status
Rev
Is...
Maturity State
Enterprise Item Number
MOTO KNEE (MOTO KNEE) A.2 In Work
17-853<1> (17-853) A.1 In Work
17-833-R<1> (17-833-R) A.1 In Work
17-833-L<2> (17-833-L) A.1 In Work
17-838<1> (Left) A.1 In Work
17-838<2> (Right) A.1 In Work
17-835<1> (17-835) A.1 In Work
17-836<1> (17-836) A.1 In Work
17-836<2> (17-836) A.1 In Work
FHCS<1> (M4 X 0.7 X... A.1 Released DT-000909
FHCS<2> (M4 X 0.7 X... A.1 Released DT-000909
BHCS<1> (M5 X 0.8 X... A.1 Released DT-000910
BHCS<2> (M5 X 0.8 X... A.1 Released DT-000910
BHCS<3> (M5 X 0.8 X... A.1 Released DT-000910
BHCS<4> (M5 X 0.8 X... A.1 Released DT-000910
BHCS<5> (M5 X 0.8 X... A.1 Released DT-000910
BHCS<6> (M5 X 0.8 X... A.1 Released DT-000910
BHCS<7> (M5 X 0.8 X... A.1 Released DT-000910
BHCS<8> (M5 X 0.8 X... A.1 Released DT-000910
FHCS<3> (M4 X 0.7 X... A.1 Released DT-000909
FHCS<4> (M4 X 0.7 X... A.1 Released DT-000909
FHCS<5> (M4 X 0.7 X... A.1 Released DT-000909
FHCS<6> (M4 X 0.7 X... A.1 Released DT-000909
FHCS<7> (M4 X 0.7 X... A.1 Released DT-000909
FHCS<8> (M4 X 0.7 X... A.1 Released DT-000909
17-840<1> (17-840) A.1 In Work
17-845<1> (17-845) A.1 In Work
17-843<1> (17-843) A.1 In Work
17-862<1> (17-862) A.1 In Work
17-847<1> (17-847) A.1 In Work
Lifecycle
Simulation
View
Tools
SOLIDWORKS
Under Defined
Editing Assembly
MMGS

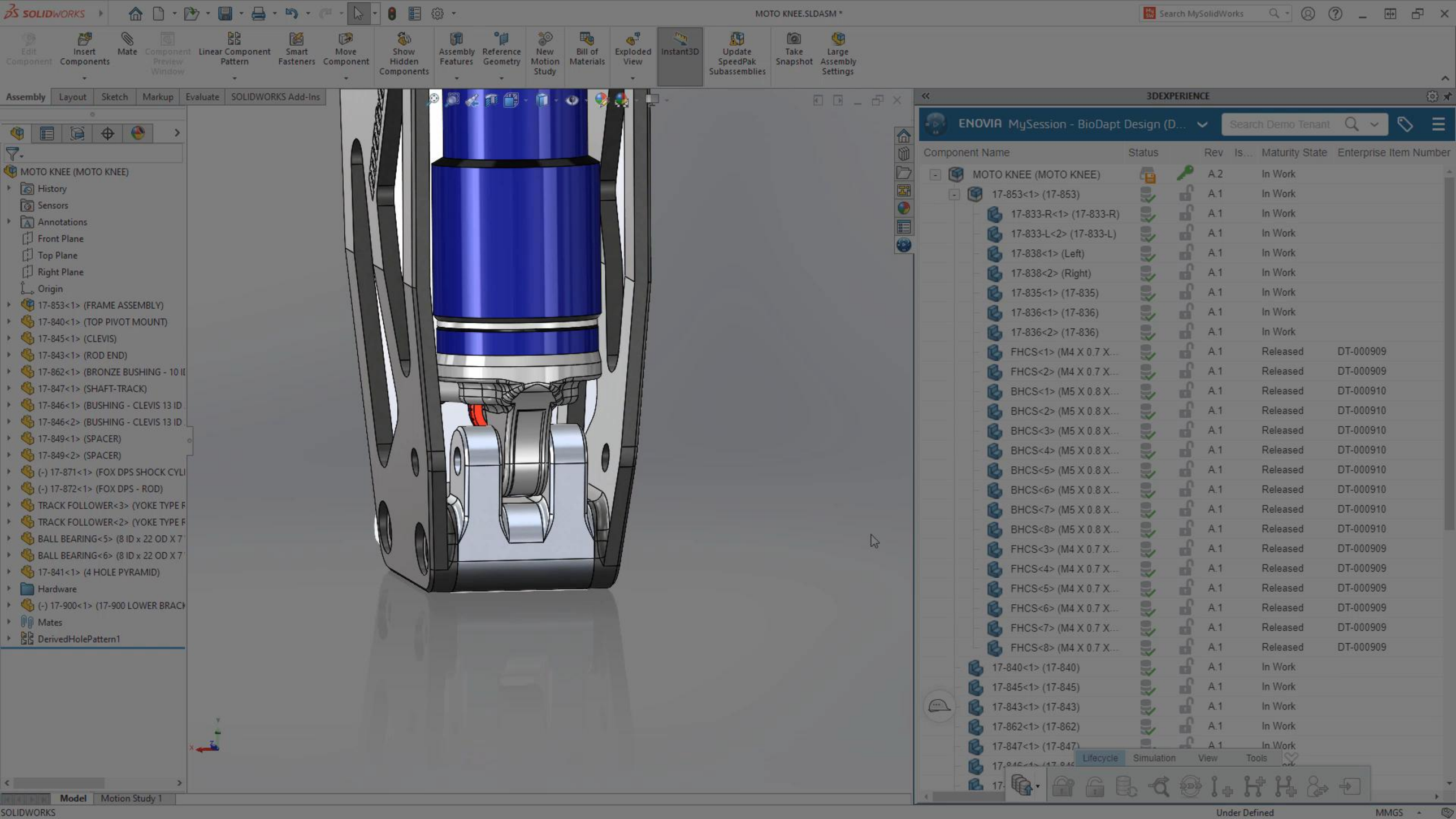
MOTO KNEE.SLDASM *
Search MySolidWorks
Edit Component
Insert Components
Mate
Component Preview Window
Linear Component Pattern
Smart Fasteners
Move Component
Show Hidden Components
Assembly Features
Reference Geometry
New Motion Study
Bill of Materials
Exploded View
Instant3D
Update SpeedPak Subassemblies
Take Snapshot
Large Assembly Settings
Assembly
Layout
Sketch
Markup
Evaluate
SOLIDWORKS Add-Ins
MOTO KNEE (MOTO KNEE)
History
Sensors
Annotations
Front Plane
Top Plane
Right Plane
Origin
17-853<1> (FRAME ASSEMBLY)
17-840<1> (TOP PIVOT MOUNT)
17-845<1> (CLEVIS)
17-843<1> (ROD END)
17-862<1> (BRONZE BUSHING - 10 ID
17-847<1> (SHAFT-TRACK)
17-846<1> (BUSHING - CLEVIS 13 ID
17-846<2> (BUSHING - CLEVIS 13 ID
17-849<1> (SPACER)
17-849<2> (SPACER)
(-) 17-871<1> (FOX DPS SHOCK CYLI
(-) 17-872<1> (FOX DPS - ROD)
TRACK FOLLOWER<3> (YOKE TYPE F
TRACK FOLLOWER<2> (YOKE TYPE F
BALL BEARING<5> (8 ID x 22 OD X 7
BALL BEARING<6> (8 ID x 22 OD X 7
17-841<1> (4 HOLE PYRAMID)
Hardware
(-) 17-900<1> (17-900 LOWER BRACK
Mates
DerivedHolePattern1
Model
Motion Study 1
3DEXPERIENCE
ENOVIA MySession - BioDapt Design (D...
Search Demo Tenant
Component Name
Status
Rev
Is...
Maturity State
Enterprise Item Number
MOTO KNEE (MOTO KNEE) A.2 In Work
17-853<1> (17-853) A.1 In Work
17-833-R<1> (17-833-R) A.1 In Work
17-833-L<2> (17-833-L) A.1 In Work
17-838<1> (Left) A.1 In Work
17-838<2> (Right) A.1 In Work
17-835<1> (17-835) A.1 In Work
17-836<1> (17-836) A.1 In Work
17-836<2> (17-836) A.1 In Work
FHCS<1> (M4 X 0.7 X... A.1 Released DT-000909
FHCS<2> (M4 X 0.7 X... A.1 Released DT-000909
BHCS<1> (M5 X 0.8 X... A.1 Released DT-000910
BHCS<2> (M5 X 0.8 X... A.1 Released DT-000910
BHCS<3> (M5 X 0.8 X... A.1 Released DT-000910
BHCS<4> (M5 X 0.8 X... A.1 Released DT-000910
BHCS<5> (M5 X 0.8 X... A.1 Released DT-000910
BHCS<6> (M5 X 0.8 X... A.1 Released DT-000910
BHCS<7> (M5 X 0.8 X... A.1 Released DT-000910
BHCS<8> (M5 X 0.8 X... A.1 Released DT-000910
FHCS<3> (M4 X 0.7 X... A.1 Released DT-000909
FHCS<4> (M4 X 0.7 X... A.1 Released DT-000909
FHCS<5> (M4 X 0.7 X... A.1 Released DT-000909
FHCS<6> (M4 X 0.7 X... A.1 Released DT-000909
FHCS<7> (M4 X 0.7 X... A.1 Released DT-000909
FHCS<8> (M4 X 0.7 X... A.1 Released DT-000909
17-840<1> (17-840) A.1 In Work
17-845<1> (17-845) A.1 In Work
17-843<1> (17-843) A.1 In Work
17-862<1> (17-862) A.1 In Work
17-847<1> (17-847) A.1 In Work
Lifecycle
Simulation
View
Tools
SOLIDWORKS
Under Defined
MMGS

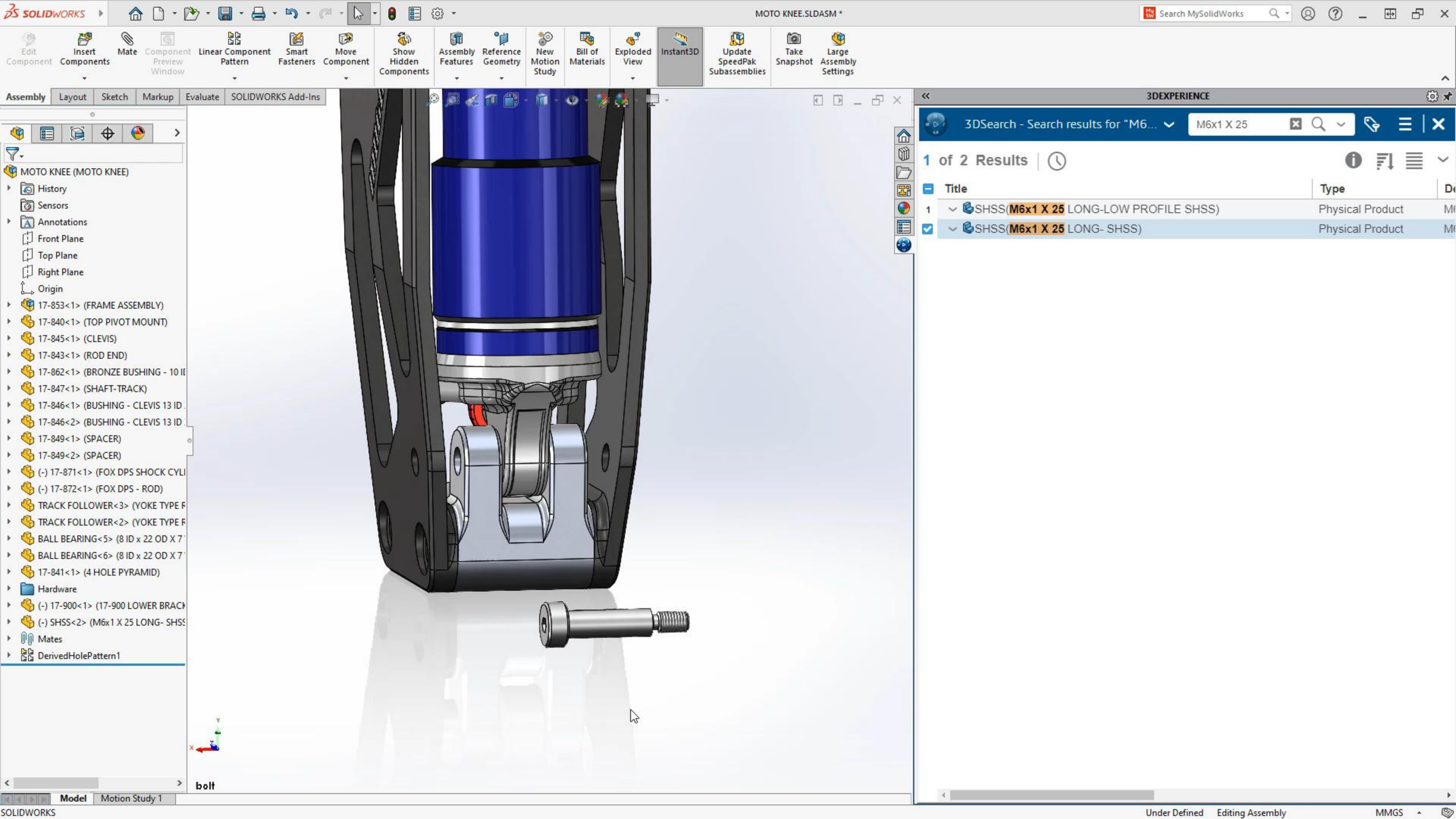
SOLIDWORKS
MOTO KNEE.SLDASM *
Search MySolidWorks
Edit Component
Insert Components
Mate
Component Preview Window
Linear Component Pattern
Smart Fasteners
Move Component
Show Hidden Components
Assembly Features
Reference Geometry
New Motion Study
Bill of Materials
Exploded View
Instant3D
Update SpeedPak Subassemblies
Take Snapshot
Large Assembly Settings
Assembly
Layout
Sketch
Markup
Evaluate
SOLIDWORKS Add-Ins
MOTO KNEE (MOTO KNEE)
History
Sensors
Annotations
Front Plane
Top Plane
Right Plane
Origin
17-853<1> (FRAME ASSEMBLY)
17-840<1> (TOP PIVOT MOUNT)
17-845<1> (CLEVIS)
17-843<1> (ROD END)
17-862<1> (BRONZE BUSHING - 10 ID
17-847<1> (SHAFT-TRACK)
17-846<1> (BUSHING - CLEVIS 13 ID
17-846<2> (BUSHING - CLEVIS 13 ID
17-849<1> (SPACER)
17-849<2> (SPACER)
(-) 17-871<1> (FOX DPS SHOCK CYLI
(-) 17-872<1> (FOX DPS - ROD)
TRACK FOLLOWER<3> (YOKE TYPE F
TRACK FOLLOWER<2> (YOKE TYPE F
BALL BEARING<5> (8 ID x 22 OD X 7
BALL BEARING<6> (8 ID x 22 OD X 7
17-841<1> (4 HOLE PYRAMID)
Hardware
(-) 17-900<1> (17-900 LOWER BRACK
(-) SHSS<2> (M6x1 X 25 LONG- SHSS
Mates
DerivedHolePattern1
bolt
Model
Motion Study 1
3DEXPERIENCE
3DSearch - Search results for "M6...
M6x1 X 25
1 of 2 Results
Title
Type
1
SHSS(M6x1 X 25 LONG-LOW PROFILE SHSS)
Physical Product
SHSS(M6x1 X 25 LONG- SHSS)
Physical Product
SOLIDWORKS
Under Defined
Editing Assembly
MMGS

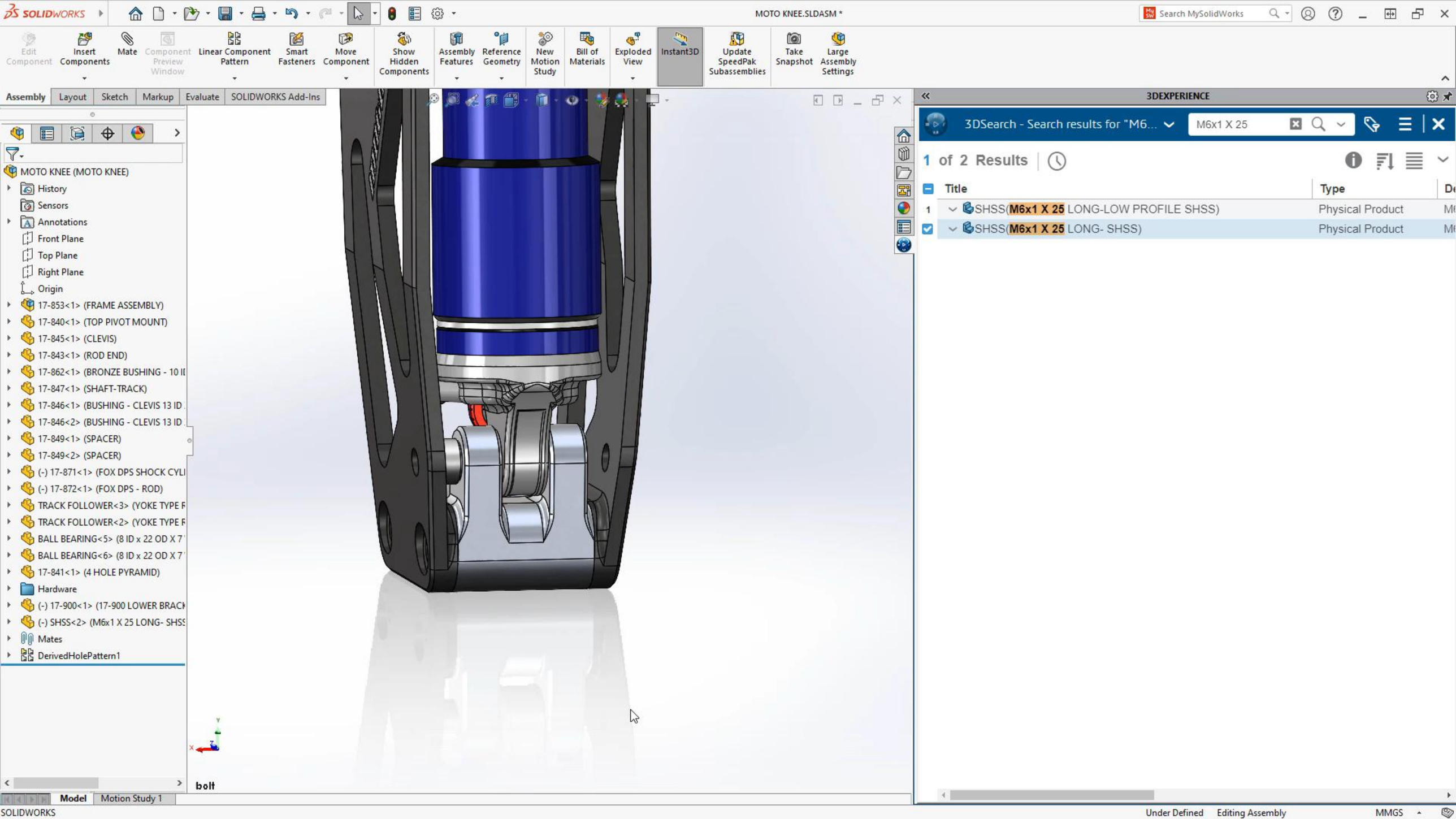
MOTO KNEE.SLDASM *
Search MySolidWorks
Edit Component
Insert Components
Mate
Component Preview Window
Linear Component Pattern
Smart Fasteners
Move Component
Show Hidden Components
Assembly Features
Reference Geometry
New Motion Study
Bill of Materials
Exploded View
Instant3D
Update SpeedPak Subassemblies
Take Snapshot
Large Assembly Settings
Assembly
Layout
Sketch
Markup
Evaluate
SOLIDWORKS Add-Ins
MOTO KNEE (MOTO KNEE)
History
Sensors
Annotations
Front Plane
Top Plane
Right Plane
Origin
17-853<1> (FRAME ASSEMBLY)
17-840<1> (TOP PIVOT MOUNT)
17-845<1> (CLEVIS)
17-843<1> (ROD END)
17-862<1> (BRONZE BUSHING - 10 ID
17-847<1> (SHAFT-TRACK)
17-846<1> (BUSHING - CLEVIS 13 ID
17-846<2> (BUSHING - CLEVIS 13 ID
17-849<1> (SPACER)
17-849<2> (SPACER)
(-) 17-871<1> (FOX DPS SHOCK CYLI
(-) 17-872<1> (FOX DPS - ROD)
TRACK FOLLOWER<3> (YOKE TYPE F
TRACK FOLLOWER<2> (YOKE TYPE F
BALL BEARING<5> (8 ID x 22 OD X 7
BALL BEARING<6> (8 ID x 22 OD X 7
17-841<1> (4 HOLE PYRAMID)
Hardware
(-) 17-900<1> (17-900 LOWER BRACK
(-) SHSS<2> (M6x1 X 25 LONG- SHSS
Mates
DerivedHolePattern1
bolt
Model
Motion Study 1
3DEXPERIENCE
3DSearch - Search results for "M6...
M6x1 X 25
1 of 2 Results
Title
Type
1
SHSS(M6x1 X 25 LONG-LOW PROFILE SHSS)
Physical Product
SHSS(M6x1 X 25 LONG- SHSS)
Physical Product
SOLIDWORKS
Under Defined
Editing Assembly
MMGS

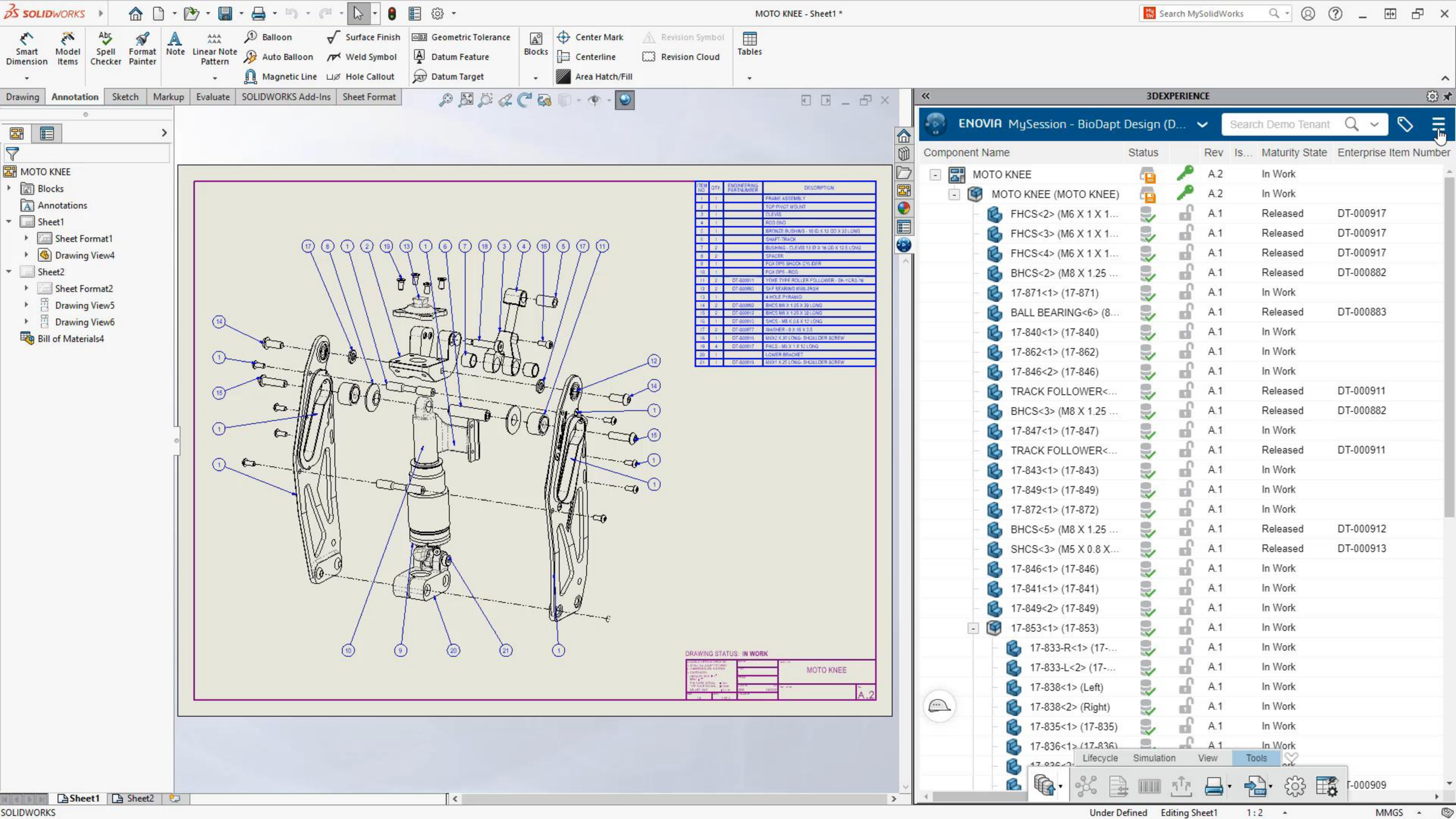
SOLIDWORKS
MOTO KNEE - Sheet1 *
Search MySolidWorks
Smart Dimension
Model Items
Spell Checker
Format Painter
Note
Linear Note Pattern
Balloon
Auto Balloon
Magnetic Line
Surface Finish
Weld Symbol
Hole Callout
Geometric Tolerance
Datum Feature
Datum Target
Blocks
Center Mark
Centerline
Area Hatch/Fill
Revision Symbol
Revision Cloud
Tables
Drawing
Annotation
Sketch
Markup
Evaluate
SOLIDWORKS Add-Ins
Sheet Format
MOTO KNEE
Blocks
Annotations
Sheet1
Sheet Format1
Drawing View4
Sheet2
Sheet Format2
Drawing View5
Drawing View6
Bill of Materials4
DRAWING STATUS: IN WORK
MOTO KNEE
A.2
3DEXPERIENCE
ENOVIA MySession - BioDapt Design (D...
Search Demo Tenant
Component Name
Status
Rev
Is...
Maturity State
Enterprise Item Number
MOTO KNEE A.2 In Work
MOTO KNEE (MOTO KNEE) A.2 In Work
FHCS<2> (M6 X 1 X 1... A.1 Released DT-000917
FHCS<3> (M6 X 1 X 1... A.1 Released DT-000917
FHCS<4> (M6 X 1 X 1... A.1 Released DT-000917
BHCS<2> (M8 X 1.25 ... A.1 Released DT-000882
17-871<1> (17-871) A.1 In Work
BALL BEARING<6> (8... A.1 Released DT-000883
17-840<1> (17-840) A.1 In Work
17-862<1> (17-862) A.1 In Work
17-846<2> (17-846) A.1 In Work
TRACK FOLLOWER<... A.1 Released DT-000911
BHCS<3> (M8 X 1.25 ... A.1 Released DT-000882
17-847<1> (17-847) A.1 In Work
TRACK FOLLOWER<... A.1 Released DT-000911
17-843<1> (17-843) A.1 In Work
17-849<1> (17-849) A.1 In Work
17-872<1> (17-872) A.1 In Work
BHCS<5> (M8 X 1.25 ... A.1 Released DT-000912
SHCS<3> (M5 X 0.8 X... A.1 Released DT-000913
17-846<1> (17-846) A.1 In Work
17-841<1> (17-841) A.1 In Work
17-849<2> (17-849) A.1 In Work
17-853<1> (17-853) A.1 In Work
17-833-R<1> (17-... A.1 In Work
17-833-L<2> (17-... A.1 In Work
17-838<1> (Left) A.1 In Work
17-838<2> (Right) A.1 In Work
17-835<1> (17-835) A.1 In Work
17-836<1> (17-836) A.1 In Work
Lifecycle
Simulation
View
Tools
Sheet1
Sheet2
SOLIDWORKS
Under Defined
Editing Sheet1
1 : 2
MMGS

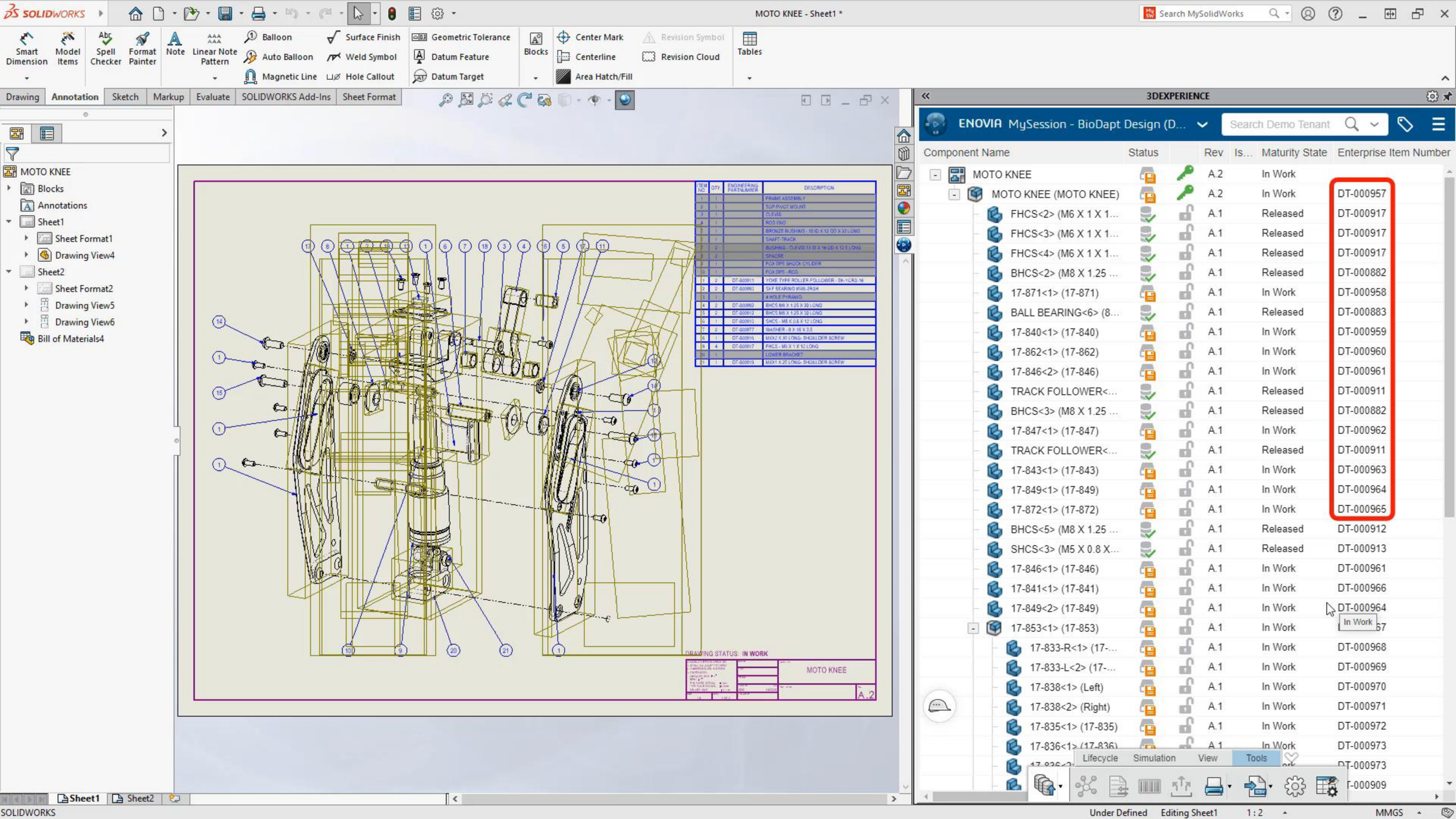
MOTO KNEE - Sheet1 *
Search MySolidWorks
Smart Dimension
Model Items
Spell Checker
Format Painter
Note
Linear Note Pattern
Balloon
Auto Balloon
Magnetic Line
Surface Finish
Weld Symbol
Hole Callout
Geometric Tolerance
Datum Feature
Datum Target
Blocks
Center Mark
Centerline
Area Hatch/Fill
Revision Symbol
Revision Cloud
Tables
Drawing
Annotation
Sketch
Markup
Evaluate
SOLIDWORKS Add-Ins
Sheet Format
MOTO KNEE
Blocks
Annotations
Sheet1
Sheet Format1
Drawing View4
Sheet2
Sheet Format2
Drawing View5
Drawing View6
Bill of Materials4
DRAWING STATUS: IN WORK
MOTO KNEE
A.2
3DEXPERIENCE
ENOVIA MySession - BioDapt Design (D...
Search Demo Tenant
Component Name
Status
Rev
Is...
Maturity State
Enterprise Item Number
MOTO KNEE
A.2
In Work
MOTO KNEE (MOTO KNEE)
A.2
In Work
DT-000957
FHCS<2> (M6 X 1 X 1...
A.1
Released
DT-000917
FHCS<3> (M6 X 1 X 1...
A.1
Released
DT-000917
FHCS<4> (M6 X 1 X 1...
A.1
Released
DT-000917
BHCS<2> (M8 X 1.25 ...
A.1
Released
DT-000882
17-871<1> (17-871)
A.1
In Work
DT-000958
BALL BEARING<6> (8...
A.1
Released
DT-000883
17-840<1> (17-840)
A.1
In Work
DT-000959
17-862<1> (17-862)
A.1
In Work
DT-000960
17-846<2> (17-846)
A.1
In Work
DT-000961
TRACK FOLLOWER<...
A.1
Released
DT-000911
BHCS<3> (M8 X 1.25 ...
A.1
Released
DT-000882
17-847<1> (17-847)
A.1
In Work
DT-000962
TRACK FOLLOWER<...
A.1
Released
DT-000911
17-843<1> (17-843)
A.1
In Work
DT-000963
17-849<1> (17-849)
A.1
In Work
DT-000964
17-872<1> (17-872)
A.1
In Work
DT-000965
BHCS<5> (M8 X 1.25 ...
A.1
Released
DT-000912
SHCS<3> (M5 X 0.8 X...
A.1
Released
DT-000913
17-846<1> (17-846)
A.1
In Work
DT-000961
17-841<1> (17-841)
A.1
In Work
DT-000966
17-849<2> (17-849)
A.1
In Work
DT-000964
In Work
17-853<1> (17-853)
A.1
In Work
17-833-R<1> (17-...
A.1
In Work
DT-000968
17-833-L<2> (17-...
A.1
In Work
DT-000969
17-838<1> (Left)
A.1
In Work
DT-000970
17-838<2> (Right)
A.1
In Work
DT-000971
17-835<1> (17-835)
A.1
In Work
DT-000972
17-836<1> (17-836)
A.1
In Work
DT-000973
Lifecycle
Simulation
View
Tools
Sheet1
Sheet2
SOLIDWORKS
Under Defined
Editing Sheet1
1 : 2
MMGS

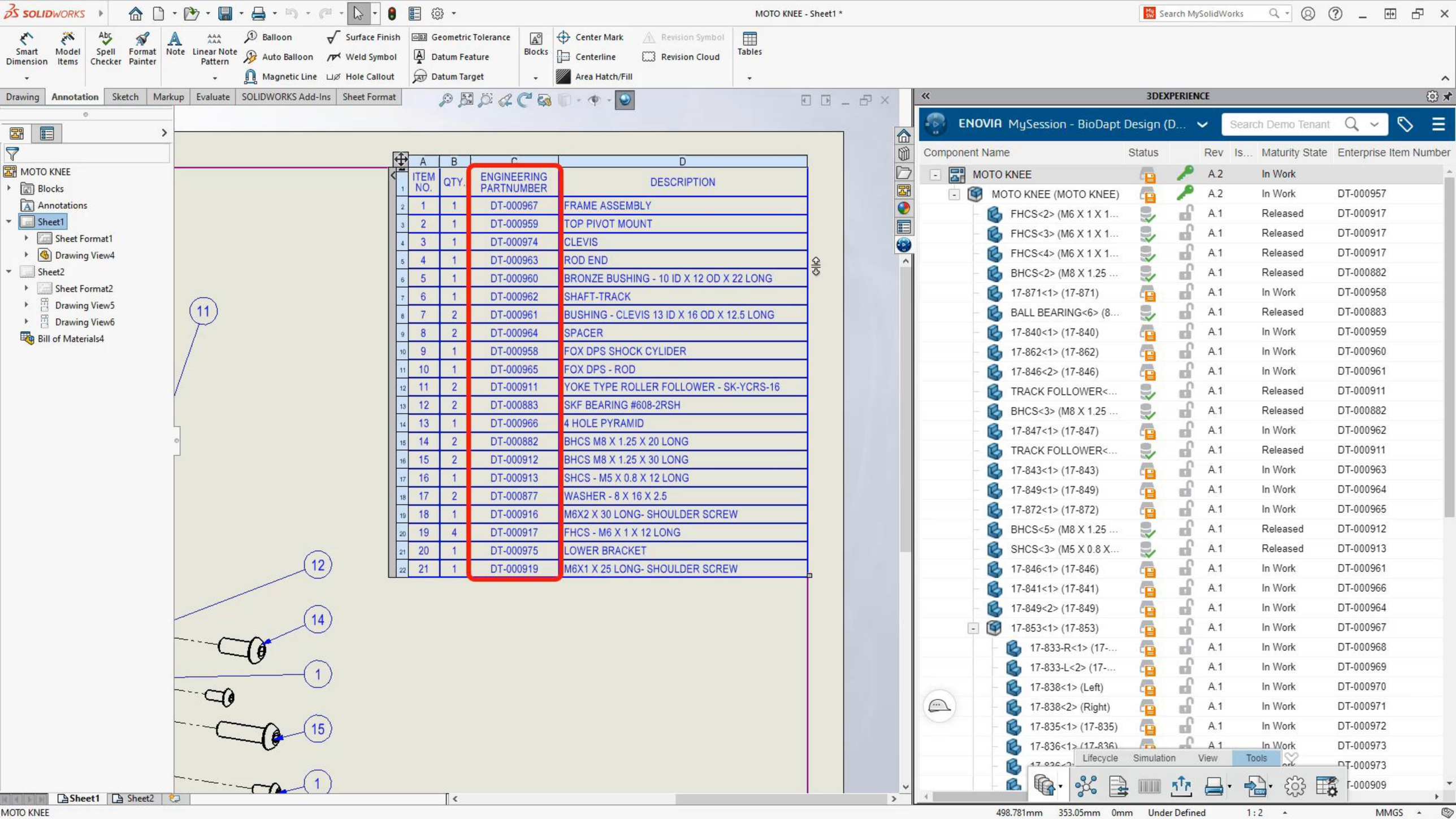
MOTO KNEE - Sheet1 *
Search MySolidWorks
Smart Dimension
Model Items
Spell Checker
Format Painter
Note
Linear Note Pattern
Balloon
Auto Balloon
Magnetic Line
Surface Finish
Weld Symbol
Hole Callout
Geometric Tolerance
Datum Feature
Datum Target
Blocks
Center Mark
Centerline
Area Hatch/Fill
Revision Symbol
Revision Cloud
Tables
Drawing
Annotation
Sketch
Markup
Evaluate
SOLIDWORKS Add-Ins
Sheet Format
MOTO KNEE
Blocks
Annotations
Sheet1
Sheet Format1
Drawing View4
Sheet2
Sheet Format2
Drawing View5
Drawing View6
Bill of Materials4
ITEM NO. | QTY. | ENGINEERING PARTNUMBER | DESCRIPTION
1 | 1 | DT-000967 | FRAME ASSEMBLY
2 | 1 | DT-000959 | TOP PIVOT MOUNT
3 | 1 | DT-000974 | CLEVIS
4 | 1 | DT-000963 | ROD END
5 | 1 | DT-000960 | BRONZE BUSHING - 10 ID X 12 OD X 22 LONG
6 | 1 | DT-000962 | SHAFT-TRACK
7 | 2 | DT-000961 | BUSHING - CLEVIS 13 ID X 16 OD X 12.5 LONG
8 | 2 | DT-000964 | SPACER
9 | 1 | DT-000958 | FOX DPS SHOCK CYLIDER
10 | 1 | DT-000965 | FOX DPS - ROD
11 | 2 | DT-000911 | YOKE TYPE ROLLER FOLLOWER - SK-YCRS-16
12 | 2 | DT-000883 | SKF BEARING #608-2RSH
13 | 1 | DT-000966 | 4 HOLE PYRAMID
14 | 2 | DT-000882 | BHCS M8 X 1.25 X 20 LONG
15 | 2 | DT-000912 | BHCS M8 X 1.25 X 30 LONG
16 | 1 | DT-000913 | SHCS - M5 X 0.8 X 12 LONG
17 | 2 | DT-000877 | WASHER - 8 X 16 X 2.5
18 | 1 | DT-000916 | M6X2 X 30 LONG- SHOULDER SCREW
19 | 4 | DT-000917 | FHCS - M6 X 1 X 12 LONG
20 | 1 | DT-000975 | LOWER BRACKET
21 | 1 | DT-000919 | M6X1 X 25 LONG- SHOULDER SCREW
11
12
14
1
15
1
Sheet1
Sheet2
3DEXPERIENCE
ENOVIA MySession - BioDapt Design (D...
Search Demo Tenant
Component Name | Status | Rev | Is... | Maturity State | Enterprise Item Number
MOTO KNEE | A.2 | In Work
MOTO KNEE (MOTO KNEE) | A.2 | In Work | DT-000957
FHCS<2> (M6 X 1 X 1... | A.1 | Released | DT-000917
FHCS<3> (M6 X 1 X 1... | A.1 | Released | DT-000917
FHCS<4> (M6 X 1 X 1... | A.1 | Released | DT-000917
BHCS<2> (M8 X 1.25 ... | A.1 | Released | DT-000882
17-871<1> (17-871) | A.1 | In Work | DT-000958
BALL BEARING<6> (8... | A.1 | Released | DT-000883
17-840<1> (17-840) | A.1 | In Work | DT-000959
17-862<1> (17-862) | A.1 | In Work | DT-000960
17-846<2> (17-846) | A.1 | In Work | DT-000961
TRACK FOLLOWER<... | A.1 | Released | DT-000911
BHCS<3> (M8 X 1.25 ... | A.1 | Released | DT-000882
17-847<1> (17-847) | A.1 | In Work | DT-000962
TRACK FOLLOWER<... | A.1 | Released | DT-000911
17-843<1> (17-843) | A.1 | In Work | DT-000963
17-849<1> (17-849) | A.1 | In Work | DT-000964
17-872<1> (17-872) | A.1 | In Work | DT-000965
BHCS<5> (M8 X 1.25 ... | A.1 | Released | DT-000912
SHCS<3> (M5 X 0.8 X... | A.1 | Released | DT-000913
17-846<1> (17-846) | A.1 | In Work | DT-000961
17-841<1> (17-841) | A.1 | In Work | DT-000966
17-849<2> (17-849) | A.1 | In Work | DT-000964
17-853<1> (17-853) | A.1 | In Work | DT-000967
17-833-R<1> (17-... | A.1 | In Work | DT-000968
17-833-L<2> (17-... | A.1 | In Work | DT-000969
17-838<1> (Left) | A.1 | In Work | DT-000970
17-838<2> (Right) | A.1 | In Work | DT-000971
17-835<1> (17-835) | A.1 | In Work | DT-000972
17-836<1> (17-836) | A.1 | In Work | DT-000973
Lifecycle
Simulation
View
Tools
MOTO KNEE
498.781mm
353.05mm
0mm
Under Defined
1 : 2
MMGS

SOLIDWORKS

MOTO KNEE - Sheet1 [Read-only]

Search MySolidWorks

Smart Dimension | Model Items | Spell Checker | Format Painter | Note | Linear Note Pattern | Balloon | Auto Balloon | Magnetic Line | Surface Finish | Weld Symbol | Hole Callout | Geometric Tolerance | Datum Feature | Datum Target | Blocks | Center Mark | Centerline | Area Hatch/Fill | Revision Symbol | Revision Cloud | Tables

Drawing | Annotation | Sketch | Markup | Evaluate | SOLIDWORKS Add-Ins | Sheet Format

MOTO KNEE
- Blocks
- Annotations
- Sheet1
  - Sheet Format1
  - Drawing View4
- Sheet2
  - Sheet Format2
  - Drawing View5
  - Drawing View6
- Bill of Materials4

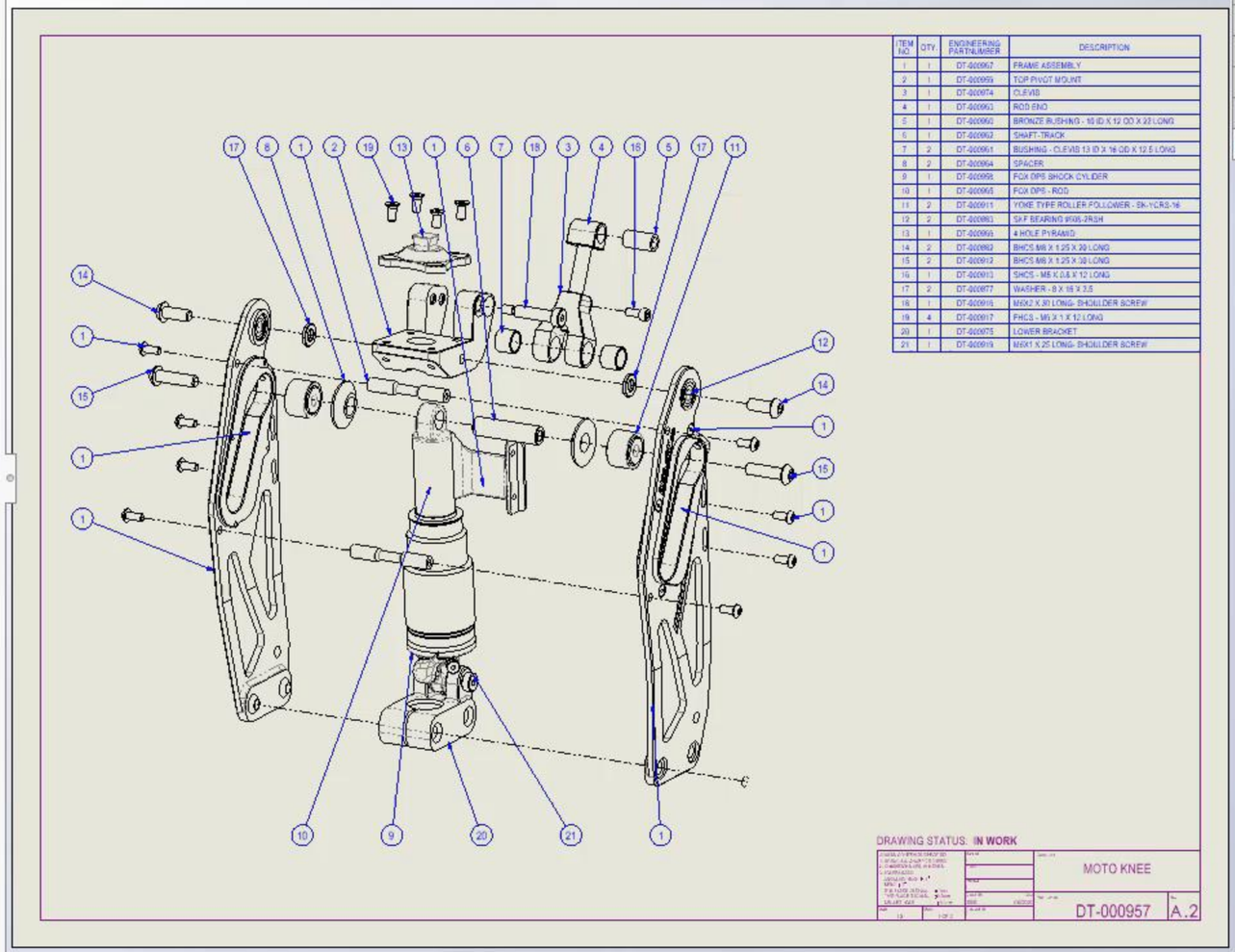

Sheet1 | Sheet2

3DEXPERIENCE

ENOVIA MySession - BioDapt Design (D...

Search Demo Tenant

Component Name	Status	Rev	Is...	Maturity State	Enterprise Item Number
MOTO KNEE		A.2		In Work	
MOTO KNEE (MOTO KNEE)		A.2		In Work	DT-000957
FHCS<2> (M6 X 1 X 1...		A.1		Released	DT-000917
FHCS<3> (M6 X 1 X 1...		A.1		Released	DT-000917
FHCS<4> (M6 X 1 X 1...		A.1		Released	DT-000917
BHCS<2> (M8 X 1.25 ...		A.1		Released	DT-000882
17-871<1> (17-871)		A.1		In Work	DT-000958
BALL BEARING<6> (8...		A.1		Released	DT-000883
17-840<1> (17-840)		A.1		In Work	DT-000959
17-862<1> (17-862)		A.1		In Work	DT-000960
17-846<2> (17-846)		A.1		In Work	DT-000961
TRACK FOLLOWER<...		A.1		Released	DT-000911
BHCS<3> (M8 X 1.25 ...		A.1		Released	DT-000882
17-847<1> (17-847)		A.1		In Work	DT-000962
TRACK FOLLOWER<...		A.1		Released	DT-000911
17-843<1> (17-843)		A.1		In Work	DT-000963
17-849<1> (17-849)		A.1		In Work	DT-000964
17-872<1> (17-872)		A.1		In Work	DT-000965
BHCS<5> (M8 X 1.25 ...		A.1		Released	DT-000912
SHCS<3> (M5 X 0.8 X...		A.1		Released	DT-000913
17-846<1> (17-846)		A.1		In Work	DT-000961
17-841<1> (17-841)		A.1		In Work	DT-000966
17-849<2> (17-849)		A.1		In Work	DT-000964
17-853<1> (17-853)		A.1		In Work	DT-000967
17-833-R<1> (17-...		A.1		In Work	DT-000968
17-833-L<2> (17-...		A.1		In Work	DT-000969
17-838<1> (Left)		A.1		In Work	DT-000970
17-838<2> (Right)		A.1		In Work	DT-000971
17-835<1> (17-835)		A.1		In Work	DT-000972
17-836<1> (17-836)		A.1		In Work	DT-000973
					DT-000973
					DT-000909

Lifecycle | Simulation | View | Tools

SOLIDWORKS

Under Defined | Editing Sheet1 | 1 : 2 | MMGS

SOLIDWORKS

MOTO KNEE - Sheet1 [Read-only]

Search MySolidWorks

Smart Dimension | Model Items | Spell Checker | Format Painter | Note | Linear Note Pattern | Balloon | Auto Balloon | Magnetic Line | Surface Finish | Weld Symbol | Hole Callout | Geometric Tolerance | Datum Feature | Datum Target | Blocks | Center Mark | Centerline | Area Hatch/Fill | Revision Symbol | Revision Cloud | Tables

Drawing | Annotation | Sketch | Markup | Evaluate | SOLIDWORKS Add-Ins | Sheet Format

- MOTO KNEE
  - Blocks
  - Annotations
  - Sheet1
    - Sheet Format1
    - Drawing View4
  - Sheet2
    - Sheet Format2
    - Drawing View5
    - Drawing View6
  - Bill of Materials4

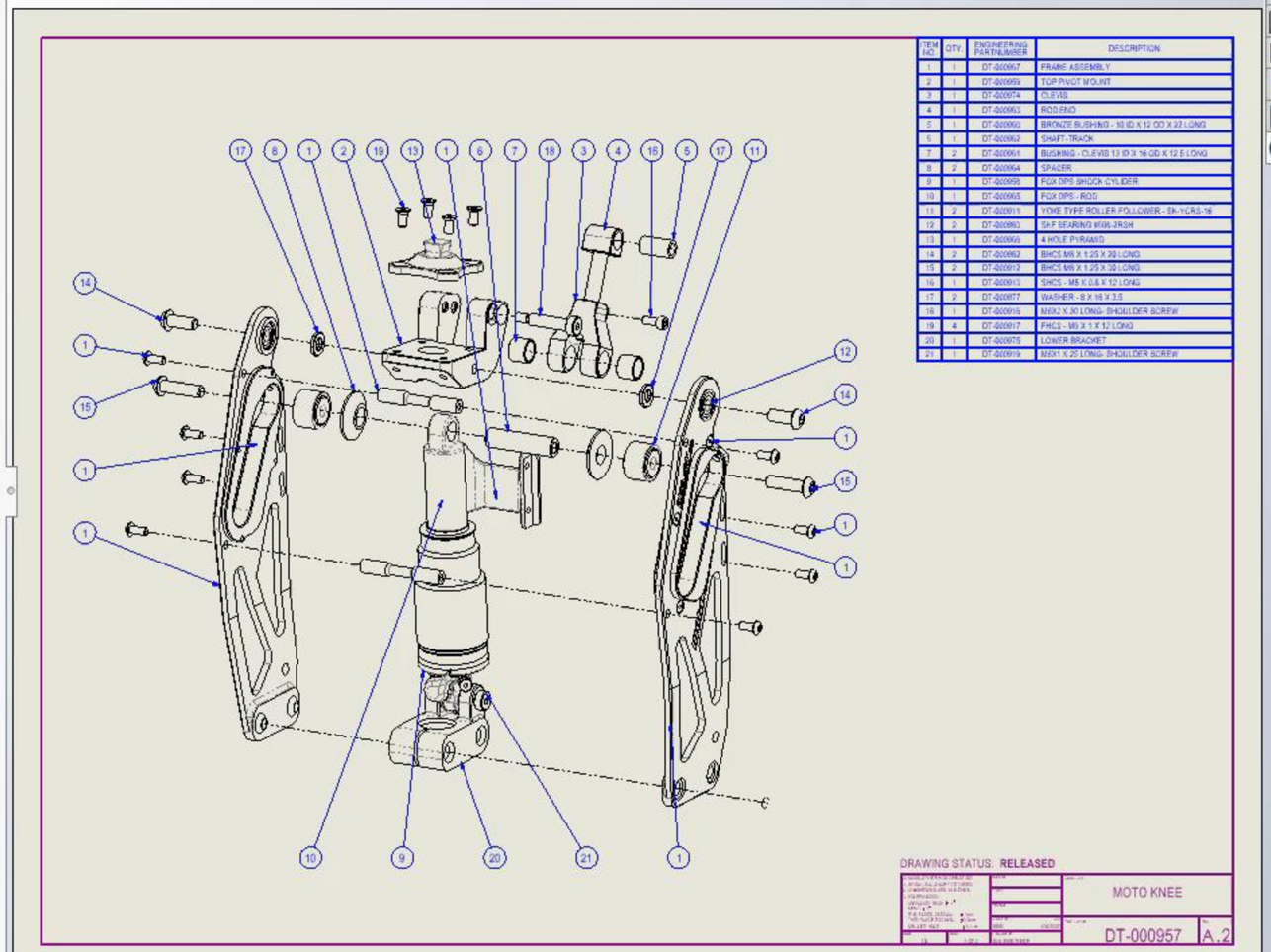

Sheet1 | Sheet2

3DEXPERIENCE

ENOVIA MySession - BioDapt Design (D...

Search Demo Tenant

Component Name	Status	Rev	Is...	Maturity State	Enterprise Item Number
MOTO KNEE		A.2		Released	
MOTO KNEE (MOTO KNEE)		A.2		Released	DT-000957
SHSS<2> (M6x1 X 25 ...		A.1		Released	DT-000919
TRACK FOLLOWER<...		A.1		Released	DT-000911
BALL BEARING<5> (8...		A.1		Released	DT-000883
17-841<1> (17-841)		A.1		Released	DT-000966
TRACK FOLLOWER<...		A.1		Released	DT-000911
17-871<1> (17-871)		A.1		Released	DT-000958
17-872<1> (17-872)		A.1		Released	DT-000965
BALL BEARING<6> (8...		A.1		Released	DT-000883
BHCS<2> (M8 X 1.25 ...		A.1		Released	DT-000882
BHCS<3> (M8 X 1.25 ...		A.1		Released	DT-000882
BHCS<4> (M8 X 1.25 ...		A.1		Released	DT-000912
17-843<1> (17-843)		A.1		Released	DT-000963
17-862<1> (17-862)		A.1		Released	DT-000960
17-849<1> (17-849)		A.1		Released	DT-000964
17-840<1> (17-840)		A.1		Released	DT-000959
17-846<1> (17-846)		A.1		Released	DT-000961
17-849<2> (17-849)		A.1		Released	DT-000964
17-845<1> (17-845)		A.1		Released	DT-000974
17-853<1> (17-853)		A.1		Released	DT-000967
17-833-R<1> (17-...		A.1		Released	DT-000968
17-833-L<2> (17-...		A.1		Released	DT-000969
17-838<1> (Left)		A.1		Released	DT-000970
17-838<2> (Right)		A.1		Released	DT-000971
17-835<1> (17-835)		A.1		Released	DT-000972
17-836<1> (17-836)		A.1		Released	DT-000973
17-836<2> (17-836)		A.1		Released	DT-000973
FHCS<1> (M4 X 0...		A.1		Released	DT-000909
FHCS<2> (M4 X 0...		A.1		Released	DT-000909

Lifecycle | Simulation | View | Tools

SOLIDWORKS

555.779mm | 354.238mm | 0mm | Under Defined | Editing Sheet1 | 1 : 2 | MMGS

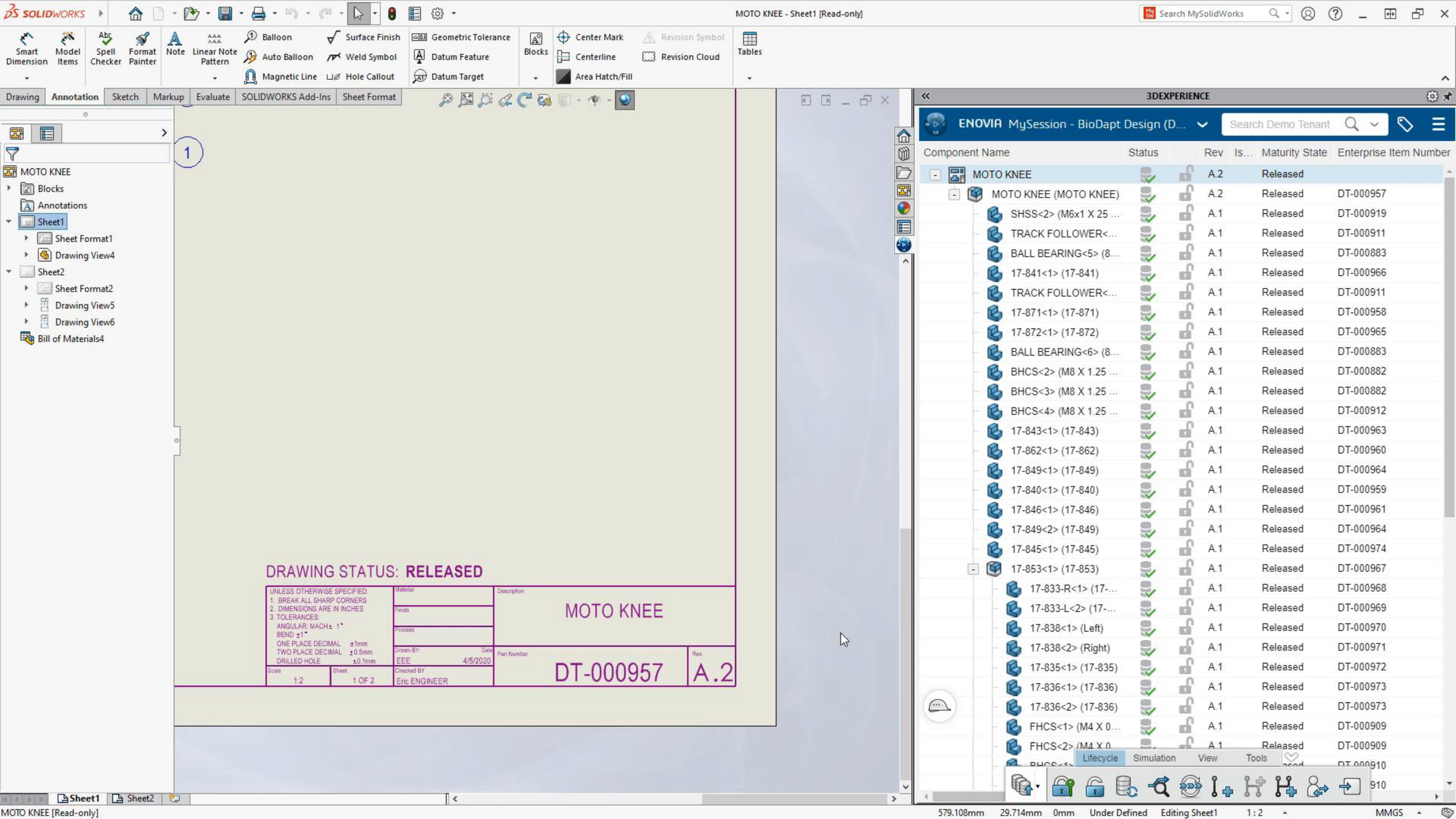
MOTO KNEE - Sheet1 [Read-only]
Search MySolidWorks
Smart Dimension
Model Items
Spell Checker
Format Painter
Note
Linear Note Pattern
Balloon
Auto Balloon
Magnetic Line
Surface Finish
Weld Symbol
Hole Callout
Geometric Tolerance
Datum Feature
Datum Target
Blocks
Center Mark
Centerline
Area Hatch/Fill
Revision Symbol
Revision Cloud
Tables
Drawing
Annotation
Sketch
Markup
Evaluate
SOLIDWORKS Add-Ins
Sheet Format
MOTO KNEE
Blocks
Annotations
Sheet1
Sheet Format1
Drawing View4
Sheet2
Sheet Format2
Drawing View5
Drawing View6
Bill of Materials4
DRAWING STATUS: RELEASED
UNLESS OTHERWISE SPECIFIED:
1. BREAK ALL SHARP CORNERS
2. DIMENSIONS ARE IN INCHES
3. TOLERANCES:
ANGULAR: MACH± 1°
BEND ±1°
ONE PLACE DECIMAL ±1mm
TWO PLACE DECIMAL ±0.5mm
DRILLED HOLE ±0.1mm
Material
Finish
Process
Description
MOTO KNEE
Drawn BY: EEE
Date 4/5/2020
Checked BY Eric ENGINEER
Part Number DT-000957
Rev. A.2
Scale 1:2
Sheet 1 OF 2
Sheet1
Sheet2
3DEXPERIENCE
ENOVIA MySession - BioDapt Design (D...
Search Demo Tenant
Component Name
Status
Rev
Is...
Maturity State
Enterprise Item Number
MOTO KNEE A.2 Released
MOTO KNEE (MOTO KNEE) A.2 Released DT-000957
SHSS<2> (M6x1 X 25 ... A.1 Released DT-000919
TRACK FOLLOWER<... A.1 Released DT-000911
BALL BEARING<5> (8... A.1 Released DT-000883
17-841<1> (17-841) A.1 Released DT-000966
TRACK FOLLOWER<... A.1 Released DT-000911
17-871<1> (17-871) A.1 Released DT-000958
17-872<1> (17-872) A.1 Released DT-000965
BALL BEARING<6> (8... A.1 Released DT-000883
BHCS<2> (M8 X 1.25 ... A.1 Released DT-000882
BHCS<3> (M8 X 1.25 ... A.1 Released DT-000882
BHCS<4> (M8 X 1.25 ... A.1 Released DT-000912
17-843<1> (17-843) A.1 Released DT-000963
17-862<1> (17-862) A.1 Released DT-000960
17-849<1> (17-849) A.1 Released DT-000964
17-840<1> (17-840) A.1 Released DT-000959
17-846<1> (17-846) A.1 Released DT-000961
17-849<2> (17-849) A.1 Released DT-000964
17-845<1> (17-845) A.1 Released DT-000974
17-853<1> (17-853) A.1 Released DT-000967
17-833-R<1> (17-... A.1 Released DT-000968
17-833-L<2> (17-... A.1 Released DT-000969
17-838<1> (Left) A.1 Released DT-000970
17-838<2> (Right) A.1 Released DT-000971
17-835<1> (17-835) A.1 Released DT-000972
17-836<1> (17-836) A.1 Released DT-000973
17-836<2> (17-836) A.1 Released DT-000973
FHCS<1> (M4 X 0... A.1 Released DT-000909
FHCS<2> (M4 X 0... A.1 Released DT-000909
Lifecycle
Simulation
View
Tools
MOTO KNEE [Read-only]
579.108mm
29.714mm
0mm
Under Defined
Editing Sheet1
1 : 2
MMGS

The 3DEXPERIENCE platform

3ds.com/3dexperience

3DEXPERIENCE | 3DDashboard Industry Innovator

Search Demo Tenant

Eric ENGINEER
Demo Tenant

My Tasks | My Data | My Markups | My Changes | My Routes

ENOVIA - Bookmark Editor - BioDapt Design - Project 1000 (Demo Tenant)

Projects ▶ Project 1000

Information

	Title	Enterprise Item Number	Description	Revision	Maturity State	Is Last Revision	Lock	Owner	Menu
	MOTO KNEE		MOTO KNEE	A.2	Released	✓		Eric ENGINEER	
	MOTO KNEE(MOTO KNEE)	DT-000980	MOTO KNEE	A.2	Released	✓		Eric ENGINEER	
	Project Specification			A	In Work	✓		Eric ENGINEER	
	VF2 FOOT		VF2 FOOT ASSEMBLY	A.1	Released	✓		Eric ENGINEER	
	VF2 Foot(VF2 Foot)	DT-000935	VF2 Foot Assembly	A.1	Released	✓		Eric ENGINEER	

Bookmark | Document | View | Tools | Lifecycle | Collaboration

3DPlay - MOTO KNEE

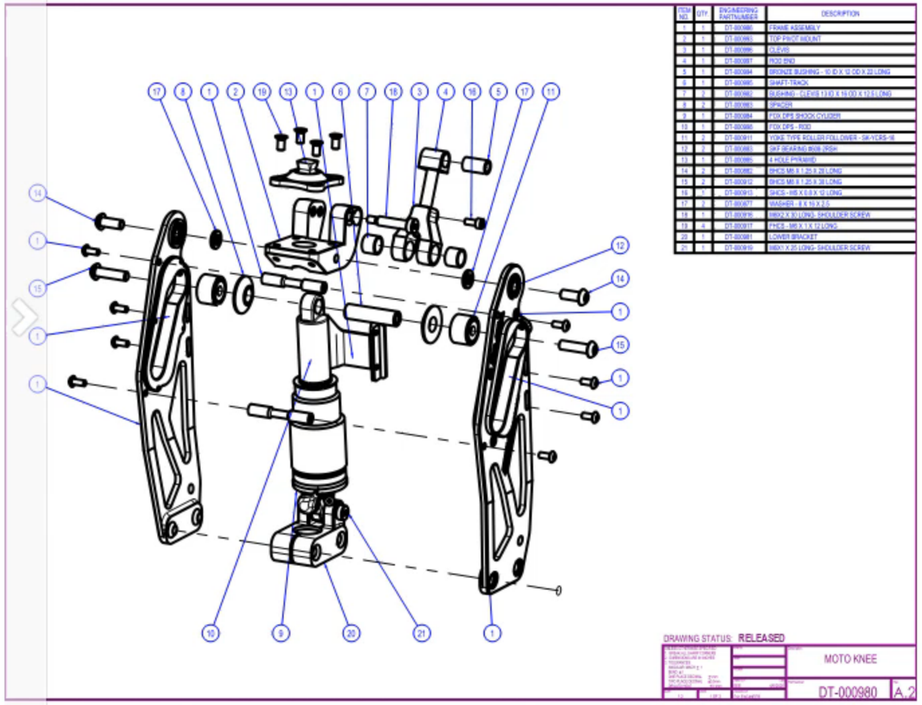

The 3DEXPERIENCE platform

3ds.com/3dexperience

3DEXPERIENCE | 3DDashboard Industry Innovator

Search Demo Tenant

Eric ENGINEER
Demo Tenant

My Tasks | My Data | My Markups | My Changes | My Routes

ENOVIA - Bookmark Editor - BioDapt Design - Project 1000 (Demo Tenant)

Projects ▶ Project 1000

	Title	Enterprise Item Number	Description	Revision	Maturity St	Menu
	MOTO KNEE		MOTO KNEE	A.2	Released	
	MOTO KNEE(MOTO KNEE)	DT-000980	MOTO KNEE	A.2	Released	
	Project Specification			A	In Work	
	VF2 FOOT		VF2 FOOT ASSEMBLY	A.1	Released	
	VF2 Foot(VF2 Foot)	DT-000935	VF2 Foot Assembly	A.1	Released	

Bookmark | Document | View | Tools | Lifecycle | Collaboration

MOTO KNEE A.2

Eric ENGINEER 1/25/2022, 9:36:58 PM

Status	Format	Par...	Name	Do
	PDF		ad5bb810_5e...	

3DPlay - MOTO KNEE

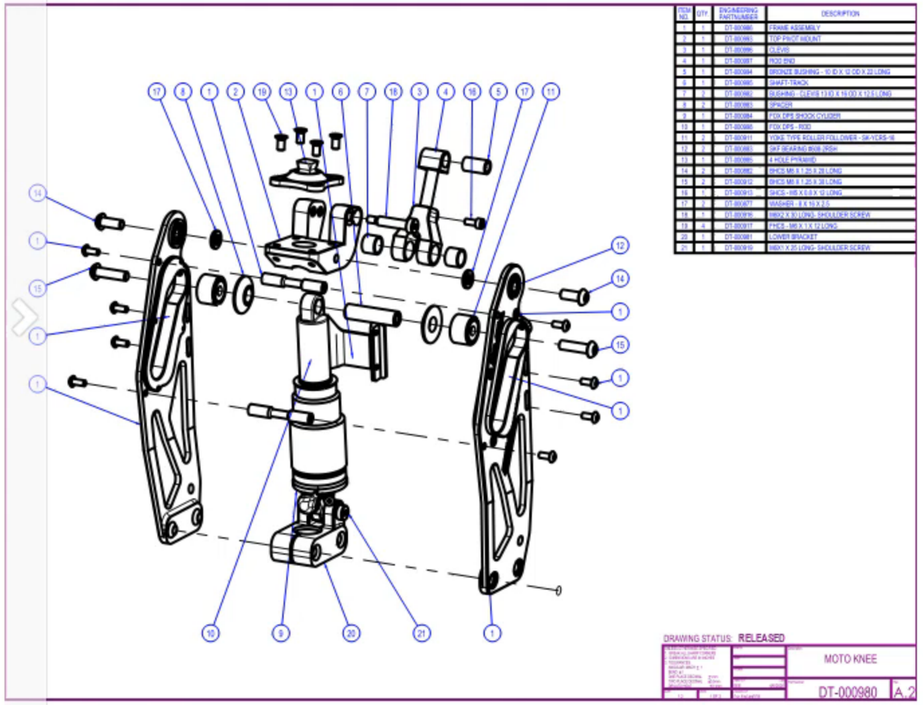

About 3DEXPERIENCE platform | Terms of Use | Privacy Policy | Cookies

DOCUMENT MANAGEMENT

SECURE CLOUD BASED FILE STORAGE FOR ALL PROJECT DATA

COLLABORATION

INTEGRATED COMMUNICATION WITH POWERFUL DESIGN REVIEW TOOLS

DESIGN RELEASE

EFFORTLESSLY MANAGE THE DETAILS OF THE RELEASE PROCESS

CHANGE MANAGEMENT

3D i V+R

SOLIDWORKS

visiativ

DASSAULT SYSTEMES

The 3DEXPERIENCE platform

3ds.com/3dexperience

3DEXPERIENCE | 3DDashboard Industry Innovator

Search Demo Tenant

Eric ENGINEER
Demo Tenant

My Tasks | My Data | My Markups | My Changes | My Routes

ENOVIA - Route Management - Formal Change Approval_

Formal Change Approval_

Owner : Eric ENGINEER
Collaborative Space : BioDapt Design
Maturity State : Released

Revision : 3
Modified : 44 minutes ago

Tasks | Members

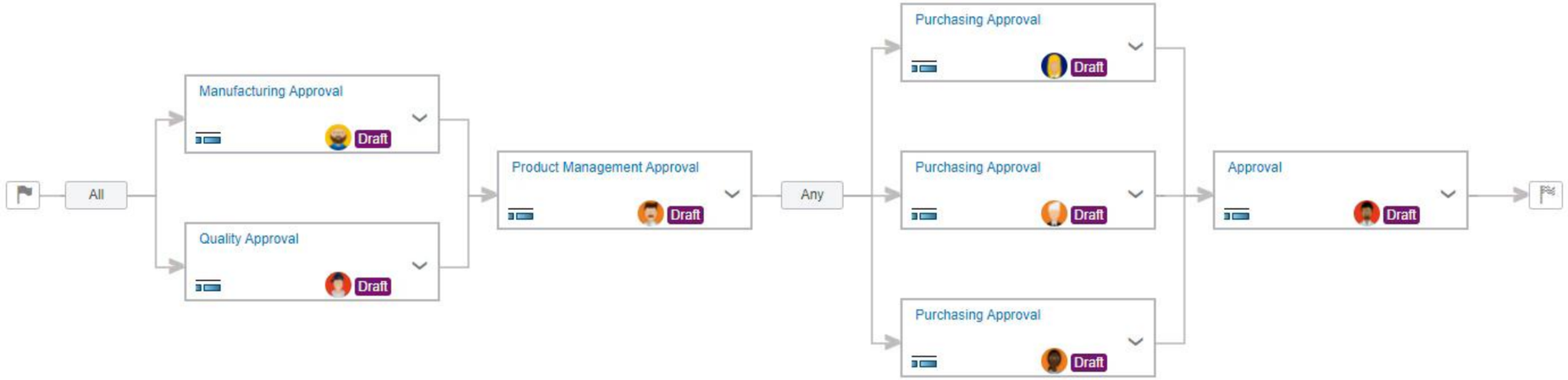

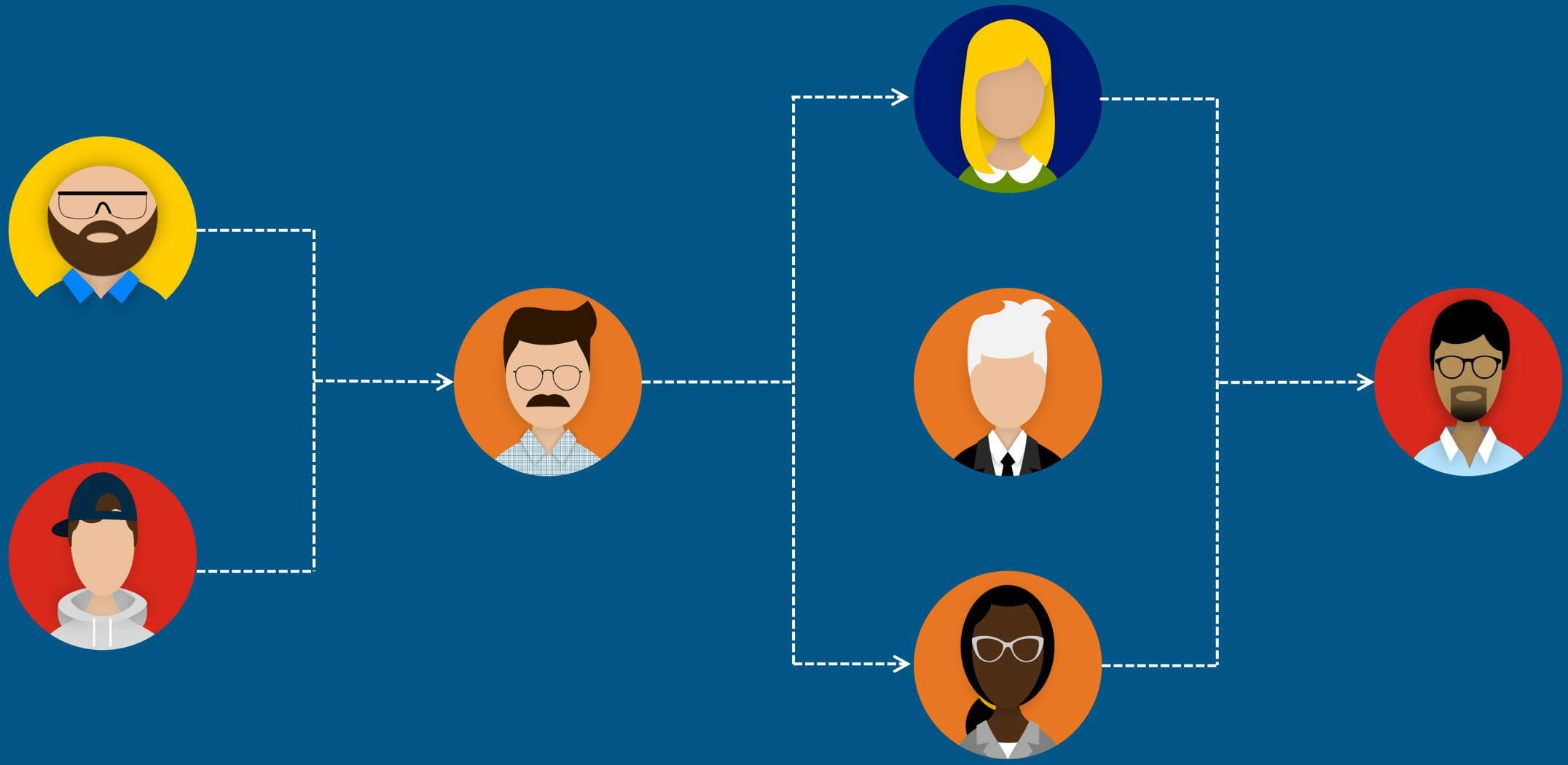

SOLIDWORKS

visiativ

DASSAULT SYSTEMES

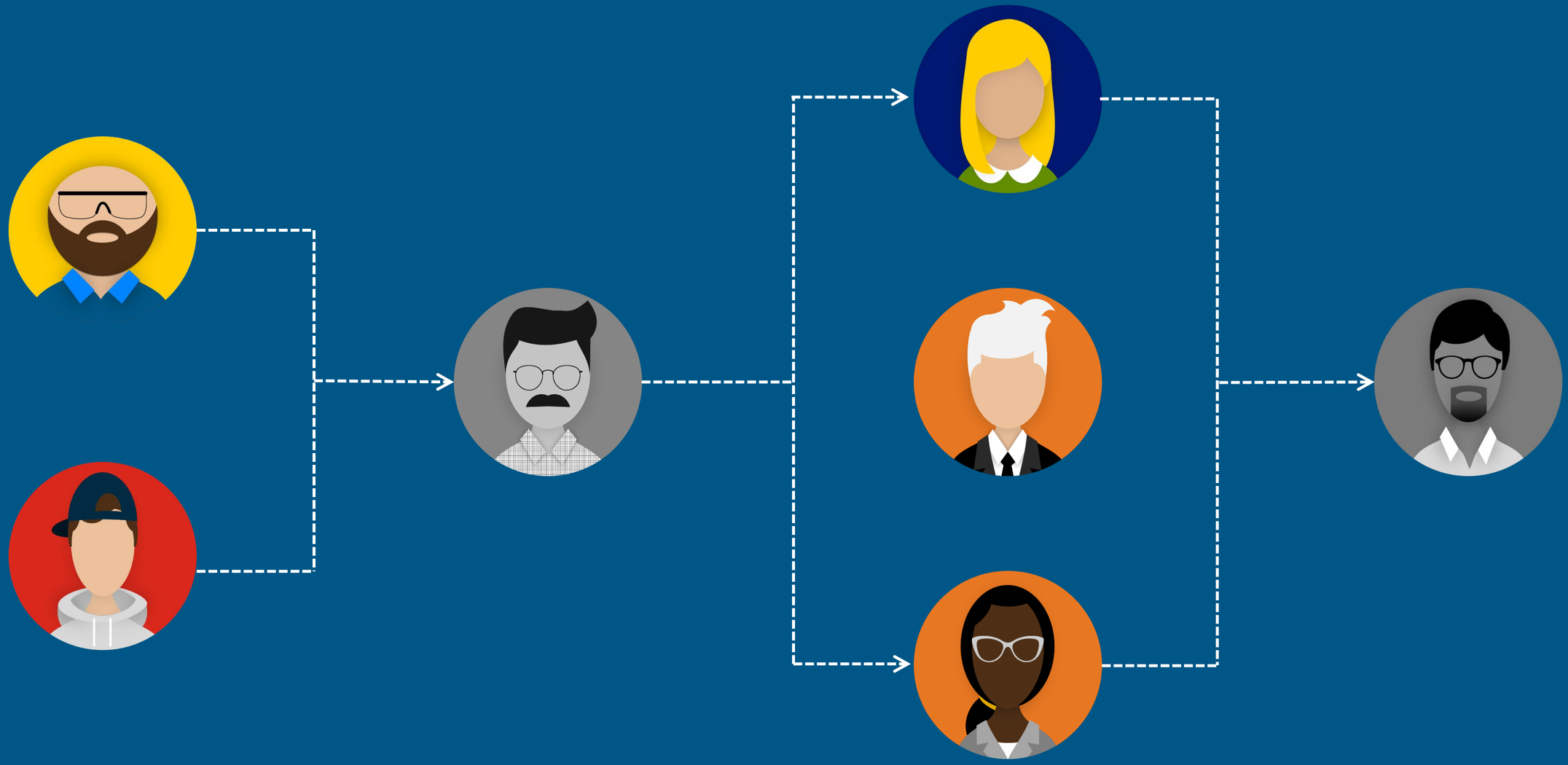

SOLIDWORKS

visiativ

DASSAULT SYSTEMES

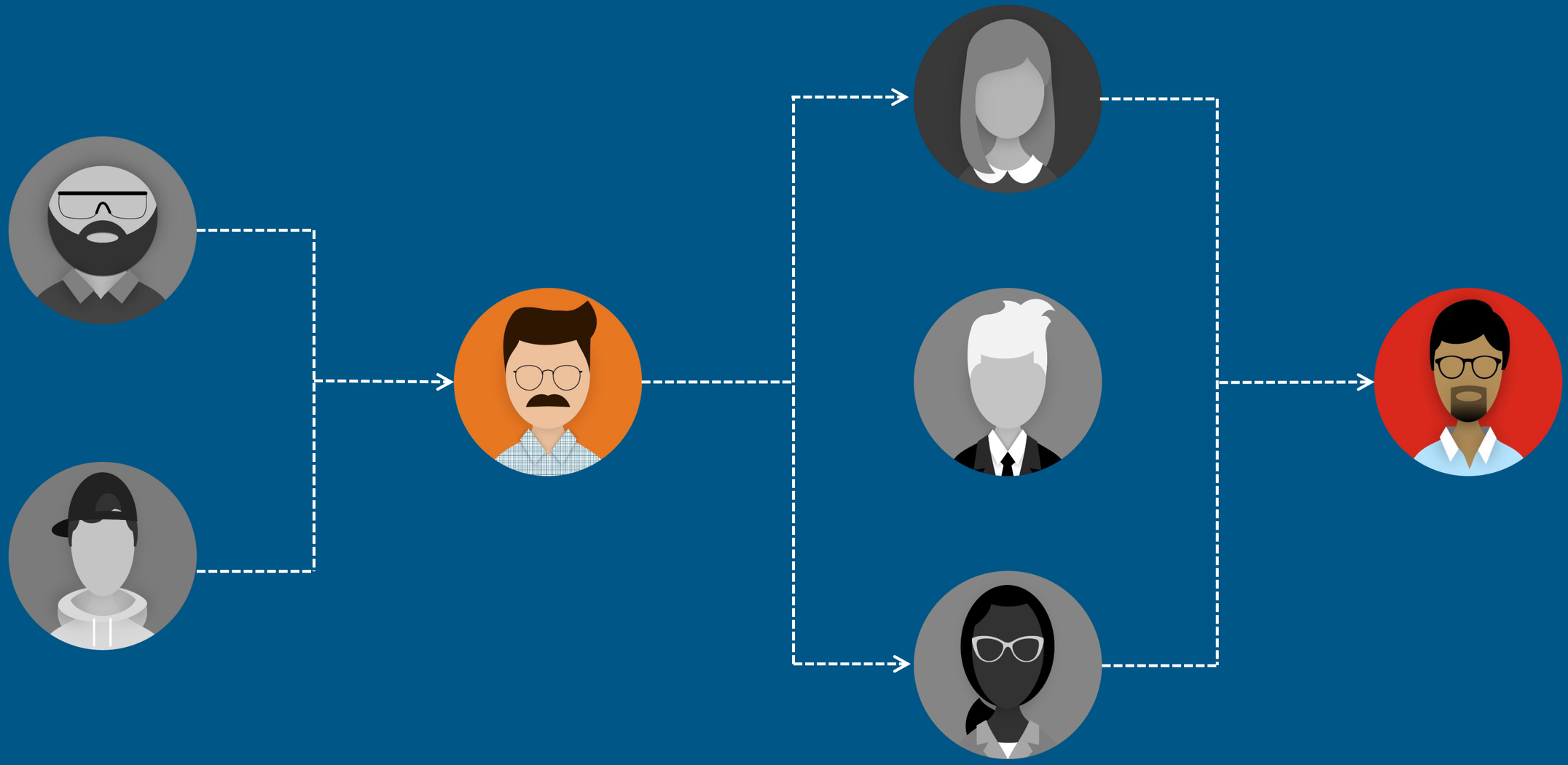

SOLIDWORKS

visiativ

DASSAULT SYSTEMES

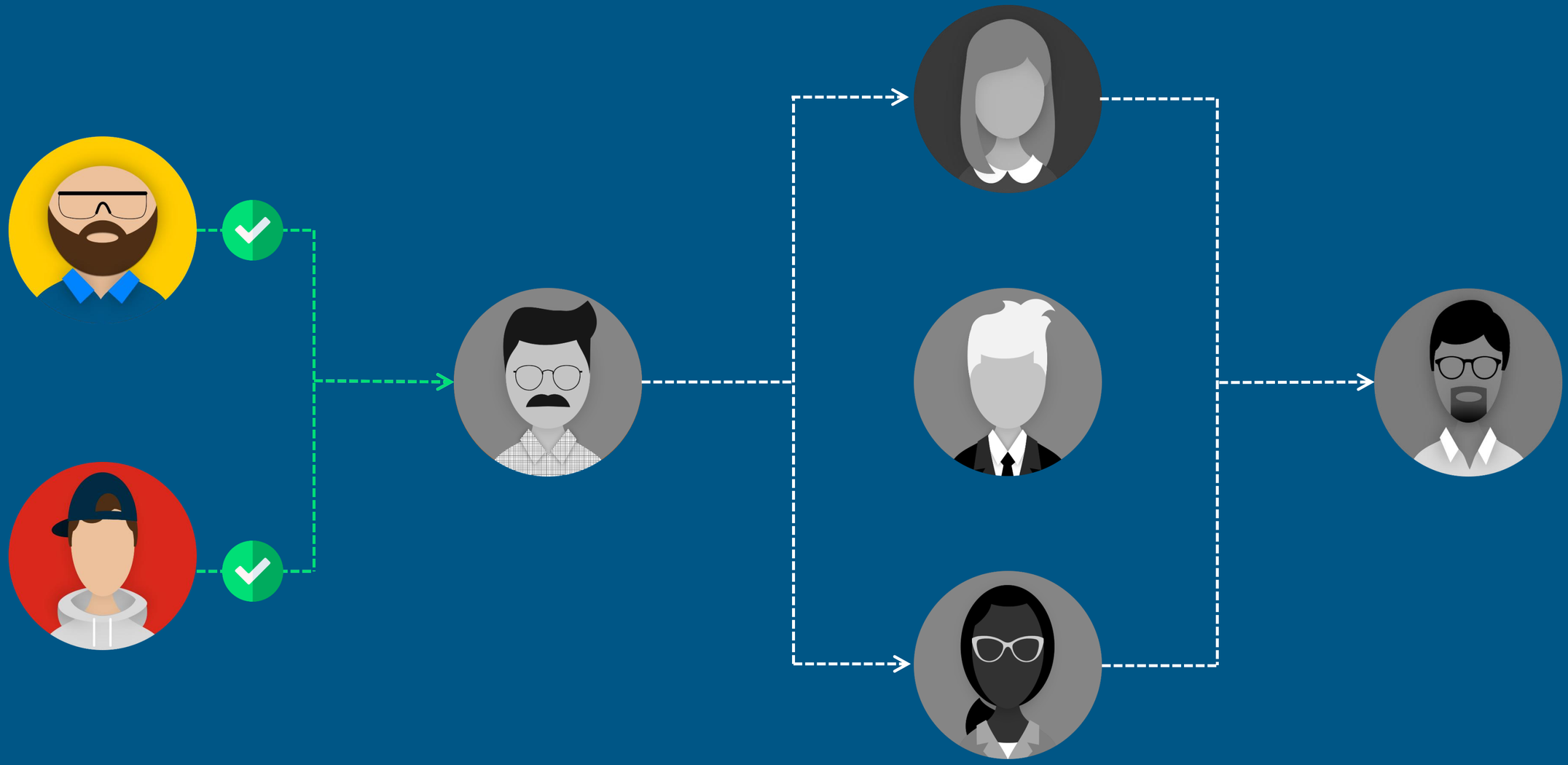

SOLIDWORKS visiativ DASSAULT SYSTEMES

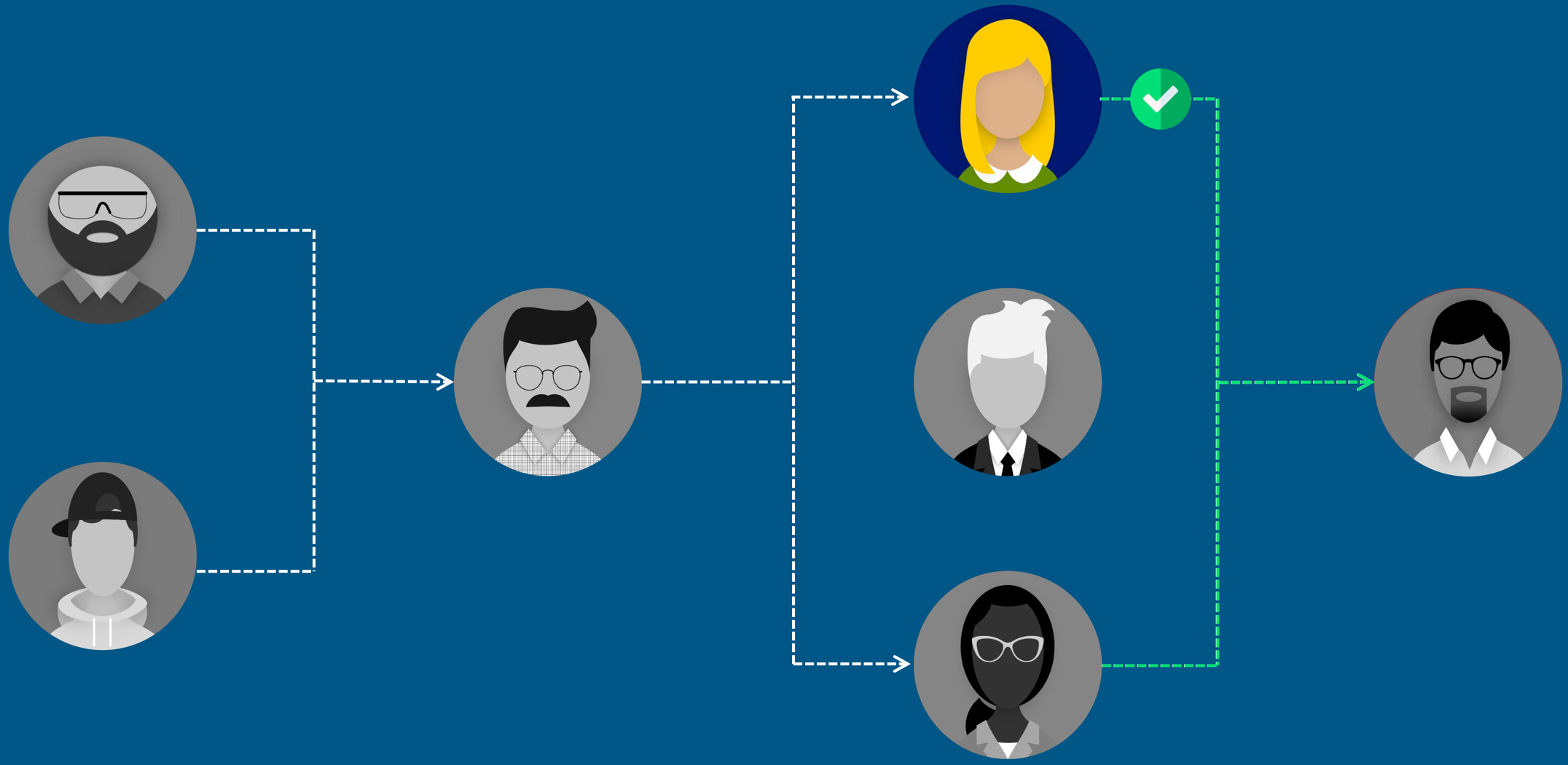

SOLIDWORKS visiativ DASSAULT SYSTEMES

The 3DEXPERIENCE platform

3ds.com/3dexperience

3DEXPERIENCE | 3DDashboard Industry Innovator

Search Demo Tenant

Eric ENGINEER
Demo Tenant

My Tasks | My Data | My Markups | My Changes | My Routes

ENOVIA - Route Management - Formal Change Approval_

Formal Change Approval_

Owner : Eric ENGINEER
Collaborative Space : BioDapt Design
Maturity State : Released

Revision : 3
Modified : 44 minutes ago

Tasks | Members

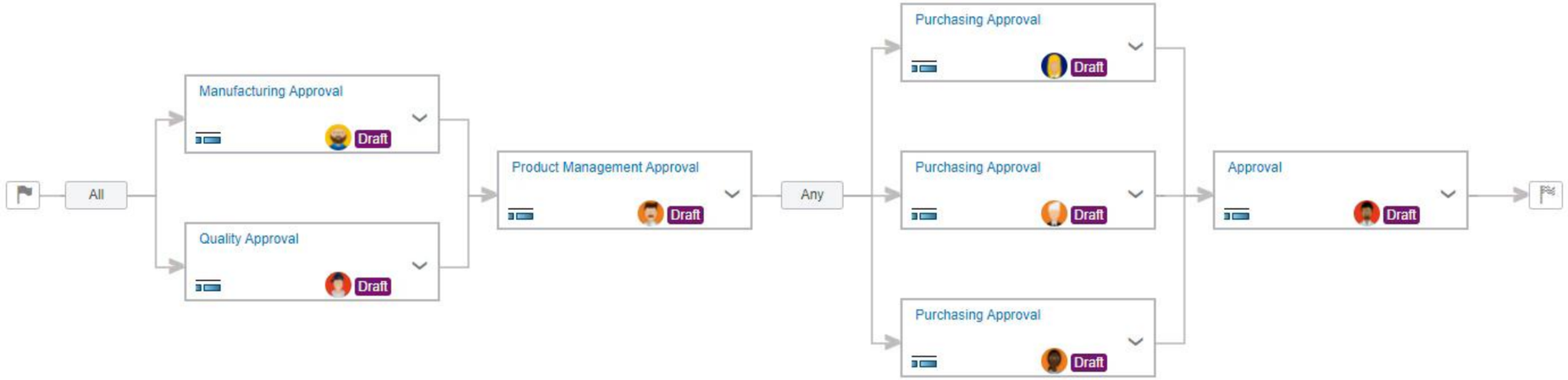

The 3DEXPERIENCE platform

3ds.com/3dexperience

3DEXPERIENCE | 3DDashboard Industry Innovator

Search Demo Tenant

Eric ENGINEER
Demo Tenant

My Tasks | My Data | My Markups | My Changes | My Routes

ENOVIA - Issue Management - My issues (7)

Title	Name	Maturity State	Description	Priority	Actions
Chain Guard Covering	ISS-SW-0000025	Draft	The rear drive chain gu...	Pre-assigned	
Ball Hitch Extension	ISS-SW-0000023	In Work	User complaint about b...	Low	
Handlebar Risers	ISS-SW-0000024	In Work	User complaint about n...	Low	
Reduce Weight	ISS-SW-0000063	In Work	Customers are looking f...	Low	
Front Shock Length Resize	ISS-SW-0000021	In Approval	The travel on the front s...	Medium	
Casted enclosure needs manufacturability...	ISS-SW-0000047	In Work	Need to verify this casti...	Medium	
Reduce Overall Weight	ISS-SW-0000069	To Do	Customers are requesti...	High	

Please select an issue to display its information.

ENOVIA - Issue 3D Review - My issues - There are no issues to show.

Drop here

Essentials | View | Tools

ENOVIA - Change Action

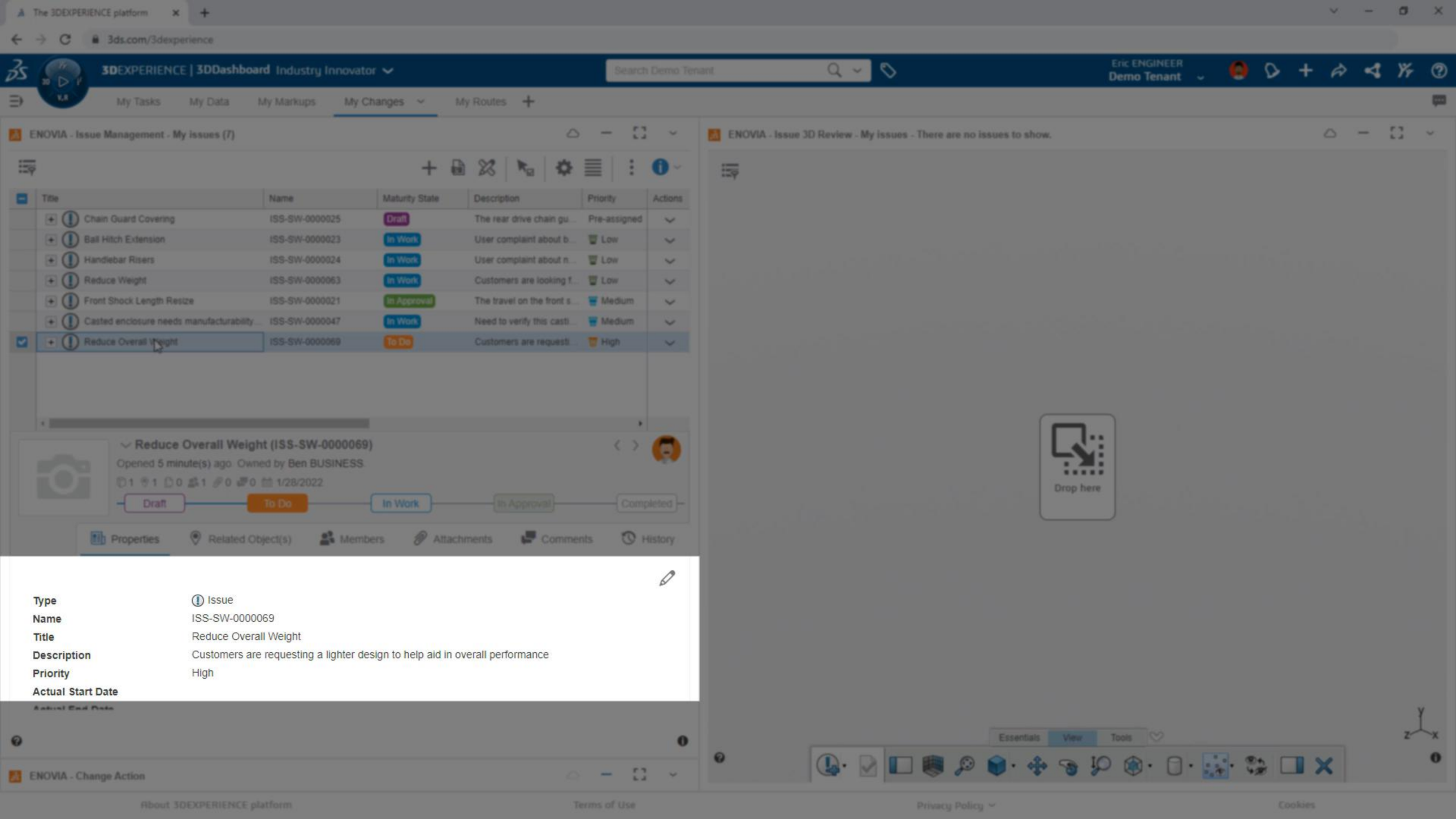
The 3DEXPERIENCE platform
3ds.com/3dexperience
3DEXPERIENCE | 3DDashboard Industry Innovator
Search Demo Tenant
Eric ENGINEER
Demo Tenant
My Tasks
My Data
My Markups
My Changes
My Routes
ENOVIA - Issue Management - My issues (7)
Title
Name
Maturity State
Description
Priority
Actions
Chain Guard Covering
ISS-SW-0000025
Draft
The rear drive chain gu...
Pre-assigned
Ball Hitch Extension
ISS-SW-0000023
In Work
User complaint about b...
Low
Handlebar Risers
ISS-SW-0000024
In Work
User complaint about n...
Low
Reduce Weight
ISS-SW-0000063
In Work
Customers are looking f...
Low
Front Shock Length Resize
ISS-SW-0000021
In Approval
The travel on the front s...
Medium
Casted enclosure needs manufacturability...
ISS-SW-0000047
In Work
Need to verify this casti...
Medium
Reduce Overall Weight
ISS-SW-0000069
To Do
Customers are requesti...
High
Reduce Overall Weight (ISS-SW-0000069)
Opened 5 minute(s) ago Owned by Ben BUSINESS
1/28/2022
Draft
To Do
In Work
In Approval
Completed
Properties
Related Object(s)
Members
Attachments
Comments
History
Type
Issue
Name
ISS-SW-0000069
Title
Reduce Overall Weight
Description
Customers are requesting a lighter design to help aid in overall performance
Priority
High
Actual Start Date
ENOVIA - Issue 3D Review - My issues - There are no issues to show.
Drop here
Essentials
View
Tools
ENOVIA - Change Action
About 3DEXPERIENCE platform
Terms of Use
Privacy Policy
Cookies

The 3DEXPERIENCE platform

3ds.com/3dexperience

3DEXPERIENCE | 3DDashboard Industry Innovator

Search Demo Tenant

Eric ENGINEER
Demo Tenant

My Tasks | My Data | My Markups | My Changes | My Routes

ENOVIA - Issue Management - My issues (7)

Title	Name	Maturity State	Description	Priority	Actions
Chain Guard Covering	ISS-SW-0000025	Draft	The rear drive chain gu...	Pre-assigned	
Ball Hitch Extension	ISS-SW-0000023	In Work	User complaint about b...	Low	
Handlebar Risers	ISS-SW-0000024	In Work	User complaint about n...	Low	
Reduce Weight	ISS-SW-0000063	In Work	Customers are looking f...	Low	
Front Shock Length Resize	ISS-SW-0000021	In Approval	The travel on the front s...	Medium	
Casted enclosure needs manufacturability...	ISS-SW-0000047	In Work	Need to verify this casti...	Medium	
Reduce Overall Weight	ISS-SW-0000069	To Do	Customers are requesti...	High	

Reduce Overall Weight (ISS-SW-0000069)

Opened 5 minute(s) ago. Owned by Ben BUSINESS.

1 1 0 1 0 0 1/28/2022

Draft → To Do → In Work → In Approval → Completed

Properties | Related Object(s) | Members | Attachments | Comments | History

1 Item(s)

Reported Against 1

Title	Type	Name	Revision	Maturity State
1-17-999(17-999)	Physical Product	2021-SW-00045696	A.1	Released

Resolved by 0

ENOVIA - Change Action

ENOVIA - Issue 3D Review - My issues - There are no issues to show.

Drop here

Essentials | View | Tools

The 3DEXPERIENCE platform

3ds.com/3dexperience

3DEXPERIENCE | 3DDashboard Industry Innovator

Search Demo Tenant

Eric ENGINEER
Demo Tenant

My Tasks | My Data | My Markups | My Changes | My Routes

ENOVIA - Issue Management - My issues (7)

Title	Name	Maturity State	Description	Priority	Actions
Chain Guard Covering	ISS-SW-0000025	Draft	The rear drive chain gu...	Pre-assigned	
Ball Hitch Extension	ISS-SW-0000023	In Work	User complaint about b...	Low	
Handlebar Risers	ISS-SW-0000024	In Work	User complaint about n...	Low	
Reduce Weight	ISS-SW-0000063	In Work	Customers are looking f...	Low	
Front Shock Length Resize	ISS-SW-0000021	In Approval	The travel on the front s...	Medium	
Casted enclosure needs manufacturability...	ISS-SW-0000047	In Work	Need to verify this casti...	Medium	
Reduce Overall Weight	ISS-SW-0000069	To Do	Customers are requesti...	High	

Reduce Overall Weight (ISS-SW-0000069)

Opened 5 minute(s) ago. Owned by Ben BUSINESS.

1 1 0 1 0 0 1/28/2022

Draft → To Do → In Work → In Approval → Completed

Properties | Related Object(s) | Members | Attachments | Comments | History

Contexts | 1

Title	Type	Name	Revision	Maturity State
VF2 Foot(VF2 Foot)	Physical Product	2021-SW-00045695	A.1	Released

ENOVIA - Issue 3D Review - My issues (1)

Essentials | View | Tools

ENOVIA - Change Action

The 3DEXPERIENCE platform

3ds.com/3dexperience

3DEXPERIENCE | 3DDashboard Industry Innovator

Search Demo Tenant

Eric ENGINEER
Demo Tenant

My Tasks | My Data | My Markups | My Changes | My Routes

ENOVIA - Issue Management - My issues (7)

Title	Name	Maturity State	Description	Priority	Actions
Chain Guard Covering	ISS-SW-0000025	Draft	The rear drive chain gu...	Pre-assigned	
Ball Hitch Extension	ISS-SW-0000023	In Work	User complaint about b...	Low	
Handlebar Risers	ISS-SW-0000024	In Work	User complaint about n...	Low	
Reduce Weight	ISS-SW-0000063	In Work	Customers are looking f...	Low	
Front Shock Length Resize	ISS-SW-0000021	In Approval	The travel on the front s...	Medium	
Casted enclosure needs manufacturability...	ISS-SW-0000047	In Work	Need to verify this casti...	Medium	
Reduce Overall Weight	ISS-SW-0000069	In Work	Customers are requesti...	High	

Reduce Overall Weight (ISS-SW-0000069)

Opened 5 minute(s) ago. Owned by Ben BU

1 1 0 1 0 0 1/28/2022

Set the issue(s) as 'In Work' state to indicate you are working on it.

Draft → To Do → In Work → In Approval → Completed

Properties | Related Object(s) | Members | Attachments | Comments | History

Contexts 1

Title	Type	Name	Revision	Maturity State
VF2 Foot(VF2 Foot)	Physical Product	2021-SW-00045695	A.1	Released

ENOVIA - Issue 3D Review - My issues (1)

Essentials | View | Tools

ENOVIA - Change Action

The 3DEXPERIENCE platform

3ds.com/3dexperience

3DEXPERIENCE | 3DDashboard Industry Innovator

Search Demo Tenant

Eric ENGINEER
Demo Tenant

My Tasks | My Data | My Markups | My Changes | My Routes

ENOVIA - Issue Management - My issues (7)

Title	Name	Maturity State	Description	Priority	Actions
Chain Guard Covering	ISS-SW-0000025	Draft	The rear drive chain gu...	Pre-assigned	
Ball Hitch E				Low	
Handlebar				Low	
Reduce We				Low	
Front Shoc				Medium	
Casted enc				Medium	
Reduce Ov				High	

New Change Action

Title *

Reduce Overall Weight

Description

Customers are requesting a lighter design to help aid in overall performance

Severity

Low | Medium | High

Due Date

Select a date

Save as Draft | Begin Work | Cancel

Completed

Properties | Comments | History

Contexts 1

Title	Type	Name	Revision	Maturity State
VF2 Foot(VF2 Foot)	Physical Product	2021-SW-00045695	A.1	Released

ENOVIA - Change Action

ENOVIA - Issue 3D Review - My issues (1)

Essentials | View | Tools

The 3DEXPERIENCE platform

3ds.com/3dexperience

3DEXPERIENCE | 3DDashboard Industry Innovator

Search Demo Tenant

Eric ENGINEER
Demo Tenant

My Tasks | My Data | My Markups | My Changes | My Routes

ENOVIA - Issue Management - My issues (7)

Title	Name	Maturity State	Description	Priority	Actions
Chain Guard Covering	ISS-SW-0000025	Draft	The rear drive chain gu...	Pre-assigned	
Ball Hitch Extension	ISS-SW-0000023	In Work	User complaint about b...	Low	
Handlebar Risers	ISS-SW-0000024	In Work	User complaint about n...	Low	
Reduce Weight	ISS-SW-0000063	In Work	Customers are looking f...	Low	
Front Shock Length Resize	ISS-SW-0000021	In Approval	The travel on the front s...	Medium	
Casted enclosure needs manufacturability...	ISS-SW-0000047	In Work	Need to verify this casti...	Medium	
Reduce Overall Weight	ISS-SW-0000069	In Work	Customers are requesti...	High	

Reduce Overall Weight (ISS-SW-0000069)

Opened 6 minute(s) ago. Owned by Ben BUSINESS.

1 1 1 1 0 0 1/28/2022

Draft → To Do → In Work → In Approval → Completed

Properties | Related Object(s) | Members | Attachments | Comments | History

Members

Contexts | 1

Title	Type	Name	Revision	Maturity State
VF2 Foot(VF2 Foot)	Physical Product	2021-SW-00045695	A.1	Released

ENOVIA - Issue 3D Review - My issues (1)

Essentials | View | Tools

ENOVIA - Change Action

The 3DEXPERIENCE platform

3ds.com/3dexperience

3DEXPERIENCE | 3DDashboard Industry Innovator

Search Demo Tenant

Eric ENGINEER
Demo Tenant

My Tasks | My Data | My Markups | My Changes | My Routes

ENOVIA - Issue Management - My issues (7)

Title	Name	Maturity State	Description	Priority	Actions
Chain Guard Covering	ISS-SW-0000025	Draft	The rear drive chain gu...	Pre-assigned	
Ball Hitch Extension	ISS-SW-0000023	In Work	User complaint about b...	Low	
Handlebar Risers	ISS-SW-0000024	In Work	User complaint about n...	Low	
Reduce Weight	ISS-SW-0000063	In Work	Customers are looking f...	Low	
Front Shock Length Resize	ISS-SW-0000021	In Approval	The travel on the front s...	Medium	
Casted enclosure needs manufacturability...	ISS-SW-0000047	In Work	Need to verify this casti...	Medium	
Reduce Overall Weight	ISS-SW-0000069	In Work	Customers are requesti...	High	
VF2 Foot(VF2 Foot)	2021-SW-00045695	Released			
1-17-999(17-999)	2021-SW-00045696	Released			
CA-SW-00000069	CA-SW-00000069	Draft			

Reduce Overall Weight (ISS-SW-0000069)

Opened 6 minute(s) ago. Owned by Ben BUSINESS.

1 1 1 1 0 0 1/28/2022

Draft → To Do → In Work → In Approval → Completed

Properties | Related Object(s) | Members | Attachments | Comments | History

Contexts 1

Title	Type	Name	Revision	Maturity State
VF2 Foot(VF2 Foot)	Physical Product	2021-SW-00045695	A.1	Released

ENOVIA - Change Action

ENOVIA - Issue 3D Review - My issues (1)

Essentials | View | Tools

The 3DEXPERIENCE platform

3ds.com/3dexperience

3DEXPERIENCE | 3DDashboard Industry Innovator

Search Demo Tenant

Eric ENGINEER
Demo Tenant

My Tasks | My Data | My Markups | My Changes | My Routes

ENOVIA - Issue Management - My issues (7)

ENOVIA - Change Action

Minimize

Reduce Overall Weight

Owner : Eric ENGINEER
Collab Space : BioDapt Design
Organization : Company Name
Applicability : No
Dependency : No
Governing Change Order : Unassigned
Attachment : 0
Maturity : Draft

Properties | Members | Proposed Changes | Realized Changes | Approvals | Contexts

Type	Change Action
Name	CA-SW-00000069
Title	Reduce Overall Weight
Description	Customers are requesting a lighter design to help aid in overall performance
Owner	Eric ENGINEER
Creation Date	1/26/2022, 9:02:08 AM
Actual Start Date	
Due Date	1/27/2022
Modification Date	1/26/2022, 9:02:10 AM
Estimated Start Date	
Severity	High

ENOVIA - Issue 3D Review - My issues (1)

Essentials | View | Tools

The 3DEXPERIENCE platform

3ds.com/3dexperience

3DEXPERIENCE | 3DDashboard Industry Innovator

Search Demo Tenant

Eric ENGINEER
Demo Tenant

My Tasks | My Data | My Markups | My Changes | My Routes

ENOVIA - Issue Management - My issues (7)

ENOVIA - Change Action

Reduce Overall Weight

Owner : Eric ENGINEER
Collab Space : BioDapt Design
Organization : Company Name
Applicability : No
Dependency : No
Governing Change Order : Unassigned
Attachment : 0
Maturity : Draft

Properties | Members | Proposed Changes | Realized Changes | Approvals | Contexts

Members

Eric ENGINEER
Owner, Assignee

Ben BUSINESS
Informed User

Total Rows: 2 Selected Rows: 0

ENOVIA - Issue 3D Review - My issues (1)

Essentials | View | Tools

The 3DEXPERIENCE platform

3ds.com/3dexperience

3DEXPERIENCE | 3DDashboard Industry Innovator

Search Demo Tenant

Eric ENGINEER
Demo Tenant

My Tasks | My Data | My Markups | My Changes | My Routes

ENOVIA - Issue Management - My issues (7)

ENOVIA - Change Action

Reduce Overall Weight

Owner : Eric ENGINEER
Collab Space : BioDapt Design
Organization : Company Name
Applicability : No
Dependency : No
Governing Change Order : Unassigned
Attachment : 0
Maturity : Draft

Properties | Members | Proposed Changes | Realized Changes | Approvals | Contexts

Members

Assignee: drop here or type to search person

Approver: Formal Change Approval_ | drop here or type to search person or route template

Informed User: drop here or type to search person

Add | Cancel

Eric ENGINEER
Owner, Assignee

Ben BUSINESS
Informed User

ENOVIA - Issue 3D Review - My issues (1)

Essentials | View | Tools

The 3DEXPERIENCE platform

3ds.com/3dexperience

3DEXPERIENCE | 3DDashboard Industry Innovator

Search Demo Tenant

Eric ENGINEER
Demo Tenant

My Tasks | My Data | My Markups | My Changes | My Routes

ENOVIA - Issue Management - My issues (7)

ENOVIA - Change Action

Reduce Overall Weight

Owner : Eric ENGINEER
Collab Space : BioDapt Design
Organization : Company Name
Applicability : No
Dependency : No
Governing Change Order : Unassigned
Attachment : 0
Maturity : Draft

Properties | Members | Proposed Changes | Realized Changes | Approvals | Contexts

Proposed Changes | 1

1-17-999(17-999) A.1

Name : 2021-SW-00045696
Maturity : Released
Operation : Revision
Collab Space : BioDapt Design

ENOVIA - Issue 3D Review - My issues (1)

Essentials | View | Tools

The 3DEXPERIENCE platform

3ds.com/3dexperience

3DEXPERIENCE | 3DDashboard Industry Innovator

Search Demo Tenant

Eric ENGINEER
Demo Tenant

My Tasks | My Data | My Markups | My Changes | My Routes

ENOVIA - Issue Management - My issues (7)

ENOVIA - Change Action

Reduce Overall Weight

Owner : Eric ENGINEER
Collab Space : BioDapt Design
Organization : Company Name
Applicability : No
Dependency : No
Governing Change Order : Unassigned
Attachment : 0
Maturity : Draft

Properties | Members | Proposed Changes | Realized Changes | Approvals | Contexts

Proposed Changes | 4

VF2 Foot(VF2 Foot) A.1
Name : 2021-SW-00045695
Maturity : Released
Operation : Revision
Collab Space : BioDapt Design

17-999 A.1
Name : DRW-SW-00001722
Maturity : Released
Operation : Revision
Collab Space : BioDapt Design

VF2 FOOT A.1
Name : DRW-SW-00001721
Maturity : Released
Operation : Revision
Collab Space : BioDapt Design

1-17-999(17-999) A.1
Name : 2021-SW-00045696
Maturity : Released
Operation : Revision
Collab Space : BioDapt Design

ENOVIA - Issue 3D Review - My issues (1)

Essentials | View | Tools

The 3DEXPERIENCE platform

3ds.com/3dexperience

3DEXPERIENCE | 3DDashboard Industry Innovator

Search Demo Tenant

Eric ENGINEER
Demo Tenant

My Tasks | My Data | My Markups | My Changes | My Routes

ENOVIA - Issue Management - My issues (7)

ENOVIA - Change Action

Reduce Overall Weight

Owner : Eric ENGINEER Collab Space : BioDapt Design Organization : Company Name
Applicability : No Dependency : No Governing Change Order : Unassigned
Attachment : 0
Maturity : In Work

Properties | Members | Proposed Changes | Realized Changes | Approvals | Contexts

Proposed Changes | 4

VF2 Foot(VF2 Foot) A.1
Name : 2021-SW-00045695 Maturity : Released
Operation : Revision Collab Space : BioDapt Design

17-999 A.1
Name : DRW-SW-00001722 Maturity : Released
Operation : Revision Collab Space : BioDapt Design

VF2 FOOT A.1
Name : DRW-SW-00001721 Maturity : Released
Operation : Revision Collab Space : BioDapt Design

1-17-999(17-999) A.1
Name : 2021-SW-00045696 Maturity : Released
Operation : Revision Collab Space : BioDapt Design

ENOVIA - Issue 3D Review - My issues (1)

Essentials | View | Tools

The 3DEXPERIENCE platform

3ds.com/3dexperience

3DEXPERIENCE | 3DDashboard Industry Innovator

Search Demo Tenant

Eric ENGINEER
Demo Tenant

My Tasks | My Data | My Markups | My Changes | My Routes

ENOVIA - Issue Management - My issues (7)

ENOVIA - Change Action

Reduce Overall Weight

Owner : Eric ENGINEER Collab Space : BioDapt Design Organization : Company Name
Applicability : No Dependency : No Governing Change Order : Unassigned
Attachment : 0
Maturity : In Work

Properties | Members | Proposed Changes | Realized Changes | Approvals | Contexts

Realized Changes

Realized Changes | 6

1-17-999(17-999) B.1 2021-SW-00045696	In Work BioDapt Design	
17-999 B.1 DRW-SW-00001722	In Work BioDapt Design	
VF2 Foot(VF2 Foot) B.1 2021-SW-00045695	In Work BioDapt Design	
VF2 Foot B.1 CAD-SW-00015103	In Work BioDapt Design	
VF2 FOOT B.1 DRW-SW-00001721	In Work BioDapt Design	
1-17-999 B.1 CAD-SW-00015102	In Work BioDapt Design	

ENOVIA - Issue 3D Review - My issues (1)

Essentials | View | Tools

Search MySolidWorks

Smart Dimension | Model Items | Spell Checker | Format Painter | Note | Linear Note Pattern | Balloon | Auto Balloon | Magnetic Line | Surface Finish | Weld Symbol | Hole Callout | Geometric Tolerance | Datum Feature | Datum Target | Blocks | Center Mark | Centerline | Area Hatch/Fill | Revision Symbol | Revision Cloud | Tables

Drawing | Annotation | Sketch | Markup | Evaluate | SOLIDWORKS Add-Ins | Sheet Format

- 17-999
  - Annotations
  - Sheet1
    - Sheet Format1
    - Drawing View1
    - Drawing View2
    - Drawing View3

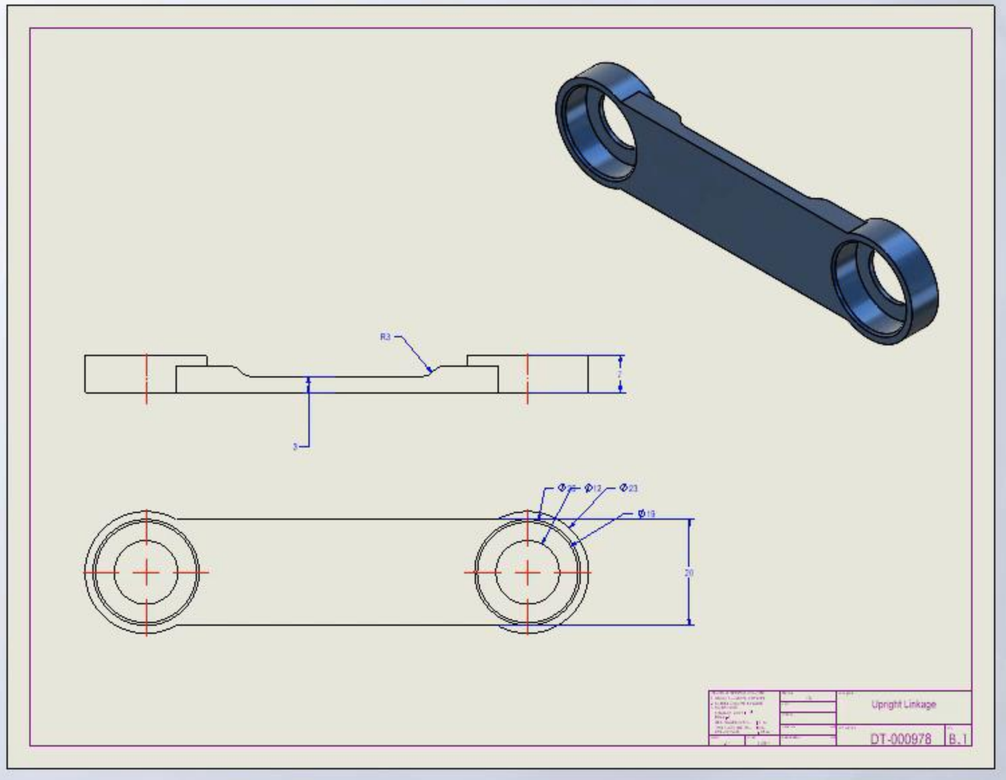

Sheet1

3DEXPERIENCE

ENOVIA MySession - BioDapt Design (D...

Search Demo Tenant

Component Name	Status		Rev	Is...	Maturity State	Description	File Name
17-999			B.1		In Work		17-999.SLDDF
1-17-999 (17-9...			B.1		In Work	Upright Linkage	1-17-999.SLDF

Lifecycle | Simulation | View | Tools

SOLIDWORKS

Under Defined | Editing Sheet1 | 2 : 1 | MMGS

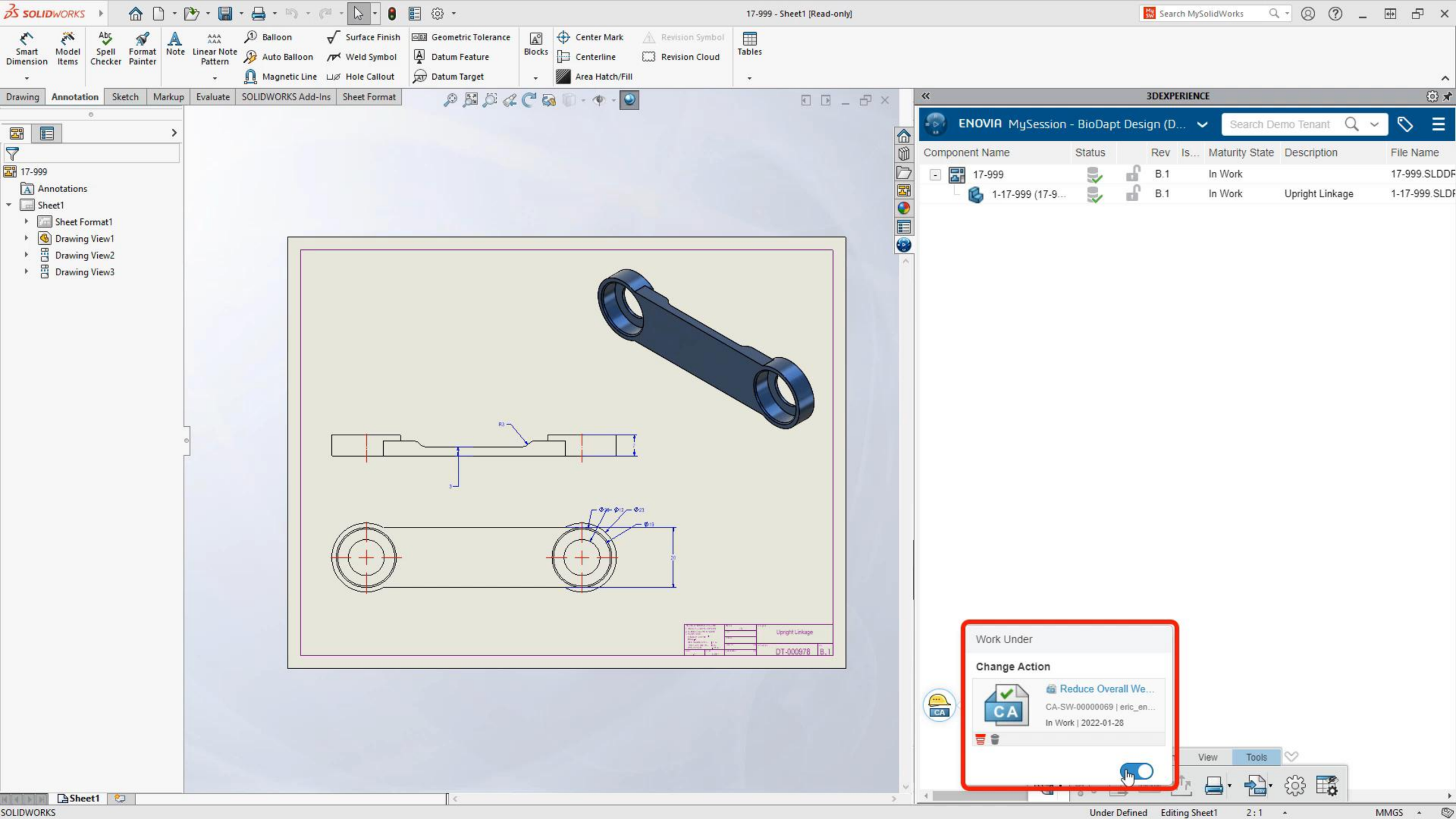
17-999 - Sheet1 [Read-only]
Search MySolidWorks
Smart Dimension
Model Items
Spell Checker
Format Painter
Note
Linear Note Pattern
Balloon
Auto Balloon
Magnetic Line
Surface Finish
Weld Symbol
Hole Callout
Geometric Tolerance
Datum Feature
Datum Target
Blocks
Center Mark
Centerline
Area Hatch/Fill
Revision Symbol
Revision Cloud
Tables
Drawing
Annotation
Sketch
Markup
Evaluate
SOLIDWORKS Add-Ins
Sheet Format
17-999
Annotations
Sheet1
Sheet Format1
Drawing View1
Drawing View2
Drawing View3
Upright Linkage
DT-000978
B.1
3DEXPERIENCE
ENOVIA MySession - BioDapt Design (D...
Search Demo Tenant
Component Name
Status
Rev
Is...
Maturity State
Description
File Name
17-999
B.1
In Work
17-999.SLDDF
1-17-999 (17-9...
B.1
In Work
Upright Linkage
1-17-999.SLDF
Work Under
Change Action
Reduce Overall We...
CA-SW-00000069 | eric_en...
In Work | 2022-01-28
View
Tools
Sheet1
SOLIDWORKS
Under Defined
Editing Sheet1
2 : 1
MMGS

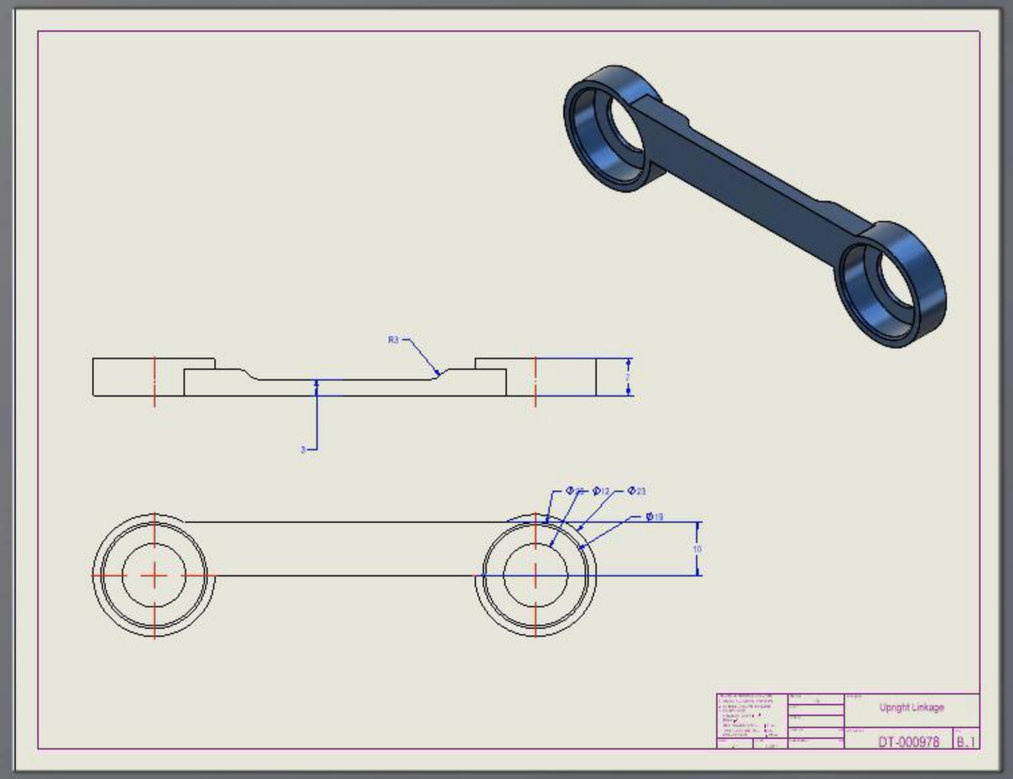
R3
Ø12
Ø23
Ø19
10
Upright Linkage
DT-000978
B.1

17-999 - Sheet1 [Read-only]

Search MySolidWorks

Geometric Tolerance
Datum Feature
Datum Target
Blocks
Center Mark
Centerline
Area Hatch/Fill
Revision Symbol
Revision Cloud
Tables

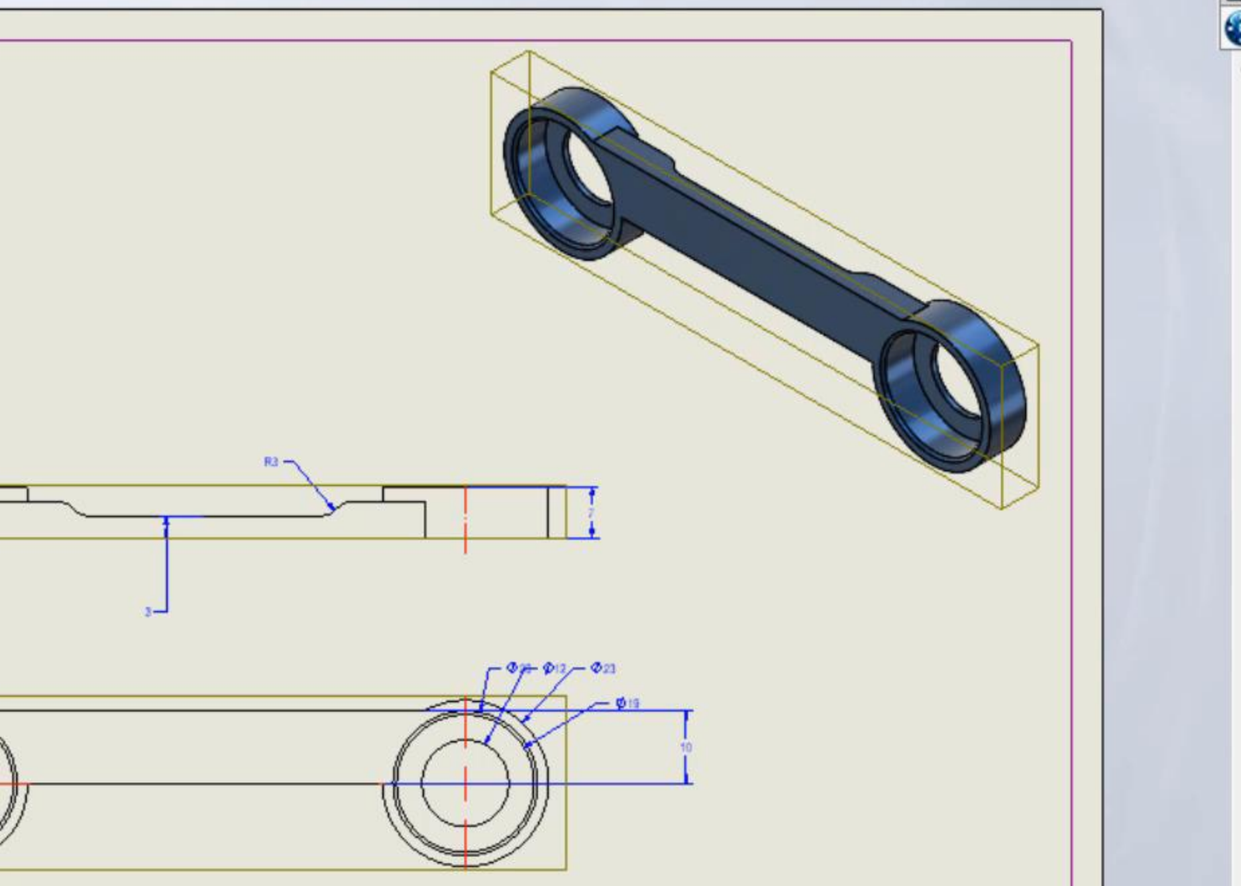

3DEXPERIENCE

ENOVIA MySession - BioDapt Design (D...

Search Demo Tenant

Component Name	Status		Rev	Is...	Maturity State	Description	File Name
17-999			B.1		In Work		17-999.SLDDF
			B.1		In Work	Upright Linkage	1-17-999.SLDF

- Expand all
- Collapse all
- Save
- Save with Options
- Lock
- Maturity
- New Revision

Smart Dimension | Model Items | Spell Checker | Format Painter | Note | Linear Note Pattern | Balloon | Auto Balloon | Magnetic Line | Surface Finish | Weld Symbol | Hole Callout | Geometric Tolerance | Datum Feature | Datum Target | Blocks | Center Mark | Centerline | Area Hatch/Fill | Revision Symbol | Revision Cloud | Tables

Drawing | Annotation | Sketch | Markup | Evaluate | SOLIDWORKS Add-Ins | Sheet Format

- 17-999
  - Annotations
  - Sheet1
    - Sheet Format1
    - Drawing View1
    - Drawing View2
    - Drawing View3

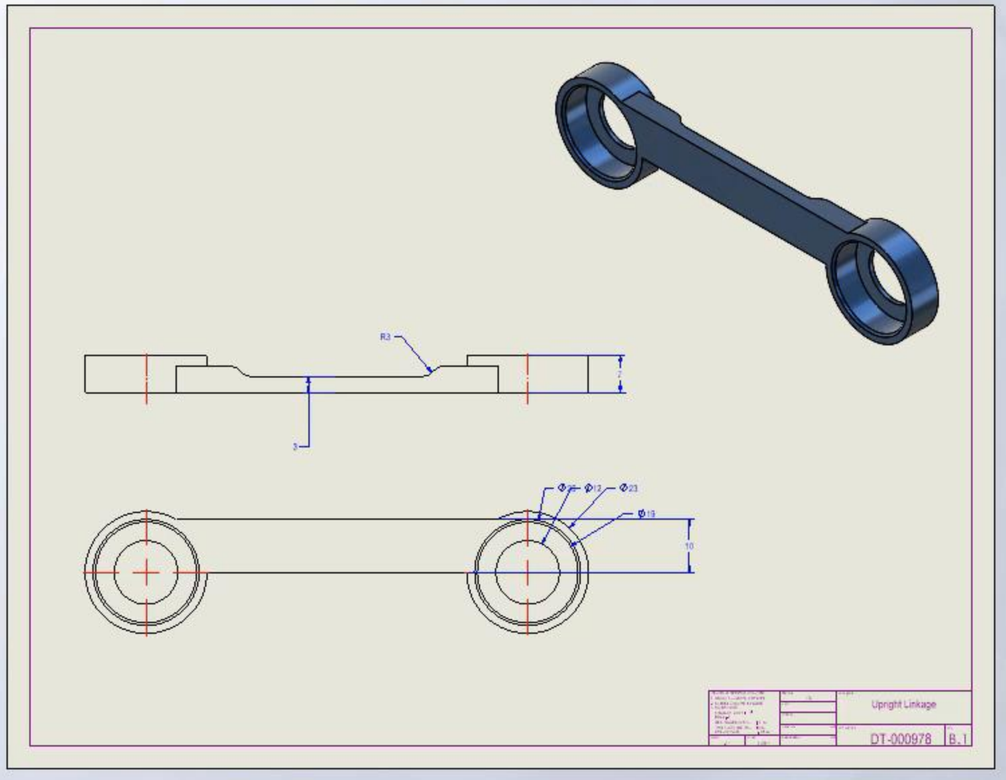

3DEXPERIENCE

ENOVIA MySession - BioDapt Design (D...
Search Demo Tenant

Component Name	Status		Rev	Is...	Maturity State	Description	File Name
17-999			B.1		Frozen		17-999.SLDDR
1-17-999 (17-9...			B.1		Frozen	Upright Linkage	1-17-999.SLDR

Lifecycle | Simulation | View | Tools

Search MySolidWorks

Smart Dimension | Model Items | Spell Checker | Format Painter | Note | Linear Note Pattern | Balloon | Auto Balloon | Magnetic Line | Surface Finish | Weld Symbol | Hole Callout | Geometric Tolerance | Datum Feature | Datum Target | Blocks | Center Mark | Centerline | Area Hatch/Fill | Revision Symbol | Revision Cloud | Tables

Drawing | Annotation | Sketch | Markup | Evaluate | SOLIDWORKS Add-Ins | Sheet Format

- 17-999
  - Annotations
  - Sheet1
    - Sheet Format1
    - Drawing View1
    - Drawing View2
    - Drawing View3

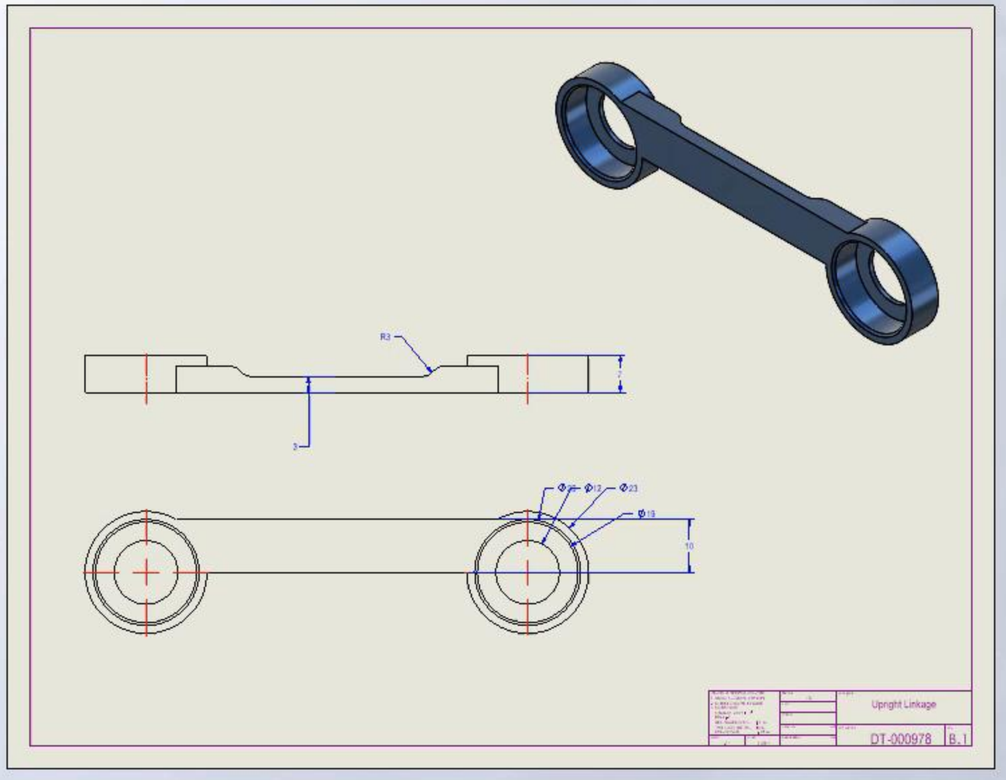

Sheet1

SOLIDWORKS

Under Defined | Editing Sheet1 | 2 : 1 | MMGS

3DEXPERIENCE

ENOVIA Change Action

Search Demo Tenant

Reduce Overall Weight

Owner : Eric ENGINEER
Collab Space : BioDapt Design
Organization : Company Name
Applicability : No
Dependency : No
Governing Change Order : Unassigned
Attachment : 0
Maturity : In Work

Realized Changes | 6

1-17-999(17-9... B.1 Revise,Modify,Change Status	Frozen
17-999 B.1 Revise,Modify,Change Status	Frozen
VF2 Foot(VF2 ... B.1 Revise,Modify,Change Status	Frozen
VF2 Foot B.1 Revise,Modify,Change Status	Frozen
VF2 FOOT B.1 Revise,Modify,Change Status	Frozen
1-17-999 B.1 Revise,Modify,Change Status	Frozen

The 3DEXPERIENCE platform

3ds.com/3dexperience

3DEXPERIENCE | 3DDashboard Industry Innovator

Search Demo Tenant

Eric ENGINEER
Demo Tenant

My Tasks | My Data | My Markups | My Changes | My Routes

ENOVIA - Issue Management - My issues (7)

ENOVIA - Change Action

Reduce Overall Weight

Owner : Eric ENGINEER
Collab Space : BioDapt Design
Organization : Company Name
Applicability : No
Dependency : No
Governing Change Order : Unassigned
Attachment : 0
Maturity : In Approval

Properties | Members | Proposed Changes | Realized Changes | Approvals | Contexts

All

Manufacturing Approval
Approved
1/27/2022 SS Completed

Quality Approval
Approved
1/27/2022 DD Completed

Product Management Approval
Approved
1/27/2022 BB Completed

Any

Purchasing A
Approved
1/27

Purchasing A
Approved
1/27

Purchasing A
Approved
1/27

ENOVIA - Issue 3D Review - My issues - There are no issues to show.

Essentials | View | Tools

About 3DEXPERIENCE platform | Terms of Use | Privacy Policy | Cookies

The 3DEXPERIENCE platform

3ds.com/3dexperience

3DEXPERIENCE | 3DDashboard Industry Innovator

Search Demo Tenant

Eric ENGINEER
Demo Tenant

My Tasks | My Data | My Markups | My Changes | My Routes

ENOVIA - Issue Management - My issues (7)

ENOVIA - Change Action

Reduce Overall Weight

Owner : Eric ENGINEER
Collab Space : BioDapt Design
Organization : Company Name
Applicability : No
Dependency : No
Governing Change Order : Unassigned
Attachment : 0
Maturity : In Approval

Properties | Members | Proposed Changes | Realized Changes | Approvals | Contexts

Purchasing Approval
Approved
1/27/2022 DD Completed

Purchasing Approval
Approved
1/27/2022 PP Completed

Purchasing Approval
Approved
1/27/2022 MM Completed

Any

Approval
Awaiting Approval
1/27/2022 EE To Do

ENOVIA - Issue 3D Review - My issues - There are no issues to show.

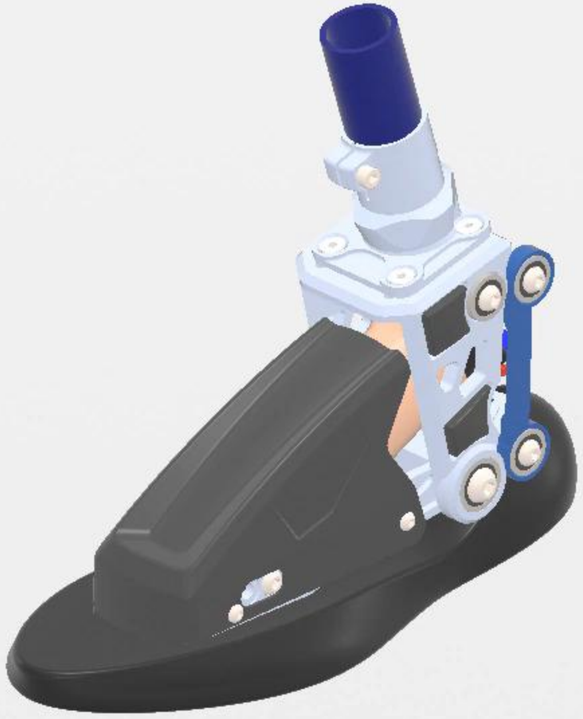

Essentials | View | Tools

About 3DEXPERIENCE platform | Terms of Use | Privacy Policy | Cookies

The 3DEXPERIENCE platform

3ds.com/3dexperience

3DEXPERIENCE | 3DDashboard Industry Innovator

Search Demo Tenant

Eric ENGINEER
Demo Tenant

My Tasks | My Data | My Markups | My Changes | My Routes

ENOVIA - Issue Management - My issues (7)

ENOVIA - Change Action

Reduce Overall Weight

Owner : Eric ENGINEER
Organization : Company Name
Dependency : No
Attachment : 0
Maturity : In Approval

Collab Space : BioDapt Design
Applicability : No
Governing Change Order : Unassigned

Properties | Members | Proposed Changes | Realized Change

Approve

Title
Approval

Expected Action
Approve

Needs Owner Review

This approval requires an electronic signature

3DEXPERIENCE ID

Username

Password

I understand that by entering my user name and password, I am applying my electronic signature which is equivalent to my handwritten signature.

3DEXPERIENCE®

Validate | Cancel

ENOVIA - Issue 3D Review - My issues - There are no issues to show.

Essentials | View | Tools

About 3DEXPERIENCE platform | Terms of Use | Privacy Policy | Cookies

The 3DEXPERIENCE platform

3ds.com/3dexperience

3DEXPERIENCE | 3DDashboard Industry Innovator

Search Demo Tenant

Eric ENGINEER
Demo Tenant

My Tasks | My Data | My Markups | My Changes | My Routes

ENOVIA - Issue Management - My issues (7)

ENOVIA - Change Action

Reduce Overall Weight

Owner : Eric ENGINEER **Collab Space** BioDapt Design **Organization :** Company Name
Applicability : No **Dependency :** No **Governing Change Order :** Unassigned
Attachment : 0
Maturity : Completed

Properties | Members | Proposed Changes | Realized Changes | Approvals | Contexts

All

Manufacturing Approval
Approved
1/27/2022 SS Completed

Quality Approval
Approved
1/27/2022 DD Completed

Product Management Approval
Approved
1/27/2022 BB Completed

Any

ENOVIA - Issue 3D Review - My issues - There are no issues to show.

Essentials | View | Tools

The 3DEXPERIENCE platform

3ds.com/3dexperience

3DEXPERIENCE | 3DDashboard Industry Innovator

Search Demo Tenant

Eric ENGINEER
Demo Tenant

My Tasks | My Data | My Markups | My Changes | My Routes

ENOVIA - Issue Management - My issues (7)

ENOVIA - Change Action

Reduce Overall Weight

Owner : Eric ENGINEER **Collab Space** BioDapt Design **Organization :** Company Name
Applicability : No **Dependency :** No **Governing Change Order :** Unassigned
Attachment : 0
Maturity : Completed

Properties | Members | Proposed Changes | Realized Changes | Approvals | Contexts

Realized Changes | 6

1-17-999(17-999) B.1 2021-SW-00045696	Released BioDapt Design	
17-999 B.1 DRW-SW-00001722	Released BioDapt Design	
VF2 Foot(VF2 Foot) B.1 2021-SW-00045695	Released BioDapt Design	
VF2 Foot B.1 CAD-SW-00015103	Released BioDapt Design	
VF2 FOOT B.1 DRW-SW-00001721	Released BioDapt Design	
1-17-999 B.1 CAD-SW-00015102	Released BioDapt Design	

ENOVIA - Issue 3D Review - My issues - There are no issues to show.

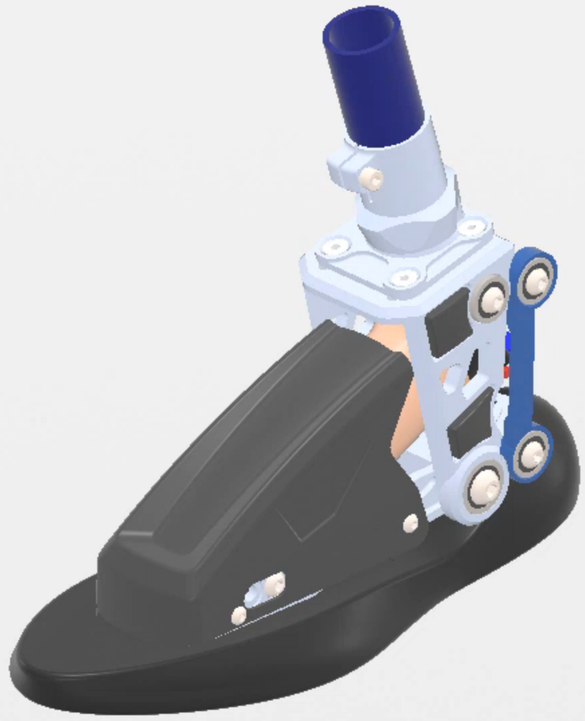

Essentials | View | Tools

ENOVIA - Issue Management - My issues (7)

ENOVIA - Change Action

ENOVIA - Properties - 1-17-999(17-999)

1-17-999(17-999) B.1

Eric ENGINEER 1/26/2022, 9:31:20 AM

Change

Change Required:

Release Authorization:

Reduce Overall Weight

CA-SW-00000069 | Eric ENGINEER

Completed | 2022-01-28

Order	Title	Approver	Status	Comments	Approval Date
1	Manufacturing Approval	Sam SUPPLIER	Approve	Looks Great - Approved	Jan 26, 2022
1	Quality Approval	Dan DESIGNER	Approve	Approved	Jan 26, 2022
2	Product Management ...	Ben BUSINESS	Approve	Great Work! Approved	Jan 26, 2022
3	Purchasing Approval	Debbie DESIGNER	Approve	This task is Auto Com...	Jan 26, 2022
3	Purchasing Approval	Pete PROJECT	Approve	This task is Auto Com...	Jan 26, 2022
3	Purchasing Approval	Megan MANAGER	Approve	Costing Completed - A...	Jan 26, 2022
4	Approval	Eric ENGINEER	Approve	APPROVED	Jan 26, 2022

Close

ENOVIA - Issue 3D Review - My issues - There are no issues to show.

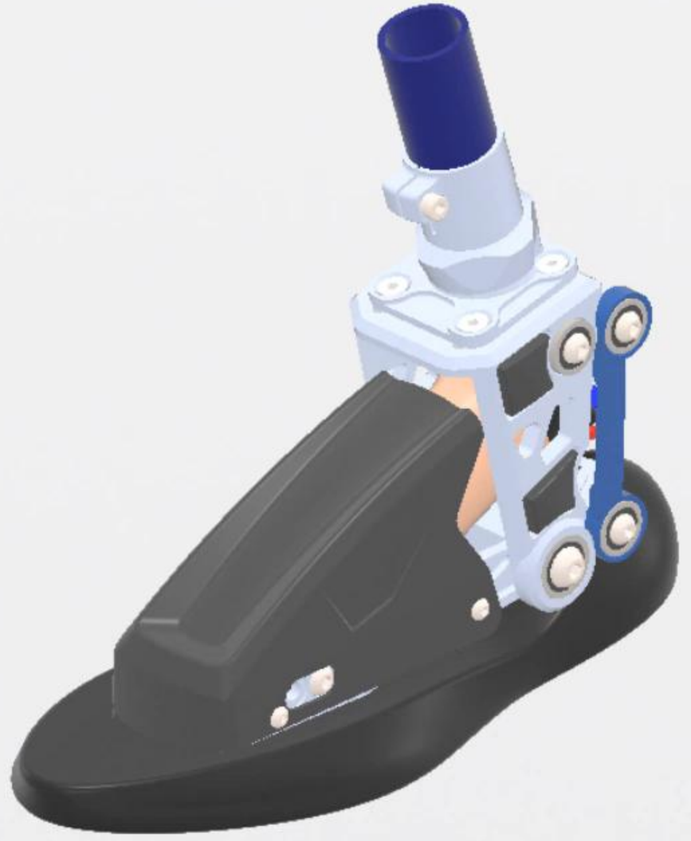

Essentials View Tools

The 3DEXPERIENCE platform

3ds.com/3dexperience

3DEXPERIENCE | 3DDashboard Industry Innovator

Search Demo Tenant

Eric ENGINEER
Demo Tenant

My Tasks | My Data | My Markups | My Changes | My Routes

ENOVIA - Issue Management - My issues (7)

Title	Name	Maturity State	Description	Priority	Actions
Chain Guard Covering	ISS-SW-0000025	Draft	The rear drive chain gu...	Pre-assigned	
Ball Hitch Extension	ISS-SW-0000023	In Work	User complaint about b...	Low	
Handlebar Risers	ISS-SW-0000024	In Work	User complaint about n...	Low	
Reduce Weight	ISS-SW-0000063	In Work	Customers are looking f...	Low	
Front Shock Length Resize	ISS-SW-0000021	In Approval	The travel on the front s...	Medium	
Casted enclosure needs manufacturability...	ISS-SW-0000047	In Work	Need to verify this casti...	Medium	
Reduce Overall Weight	ISS-SW-0000069	In Approval	Customers are requesti...	High	
VF2 Foot(VF2 Foot)	2021-SW-00045695	Released			
1-17-999(17-999)	2021-SW-00045696	Released			
Reduce Overall Weight	CA-SW-00000069	Completed			

Reduce Overall Weight (ISS-SW-0000069)

Opened 38 minute(s) ago. Owned by Ben BUSINESS.

1 1 1 1 0 1/28/2022

Draft → To Do → In Work → In Approval → Completed

Properties | Related Object(s) | Members | Attachments | Comments | History

ENOVIA - Issue 3D Review - My issues - There are no issues to show.

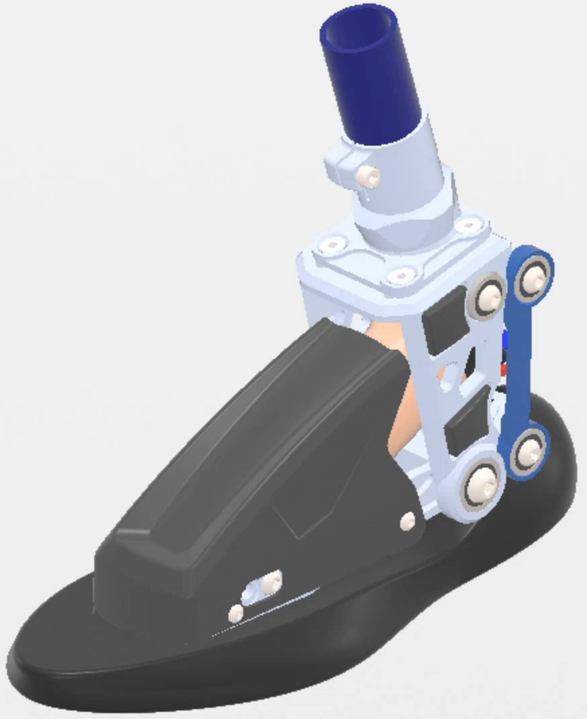

Essentials | View | Tools

ENOVIA - Change Action

About 3DEXPERIENCE platform | Terms of Use | Privacy Policy | Cookies

DOCUMENT MANAGEMENT

SECURE CLOUD BASED FILE STORAGE FOR ALL PROJECT DATA

COLLABORATION

INTEGRATED COMMUNICATION WITH POWERFUL DESIGN REVIEW TOOLS

DESIGN RELEASE

EFFORTLESSLY MANAGE THE DETAILS OF THE RELEASE PROCESS

CHANGE MANAGEMENT

FULL TRACEABILITY - FROM REQUEST TO COMPLETION

SOLIDWORKS

visiativ

DASSAULT SYSTEMES

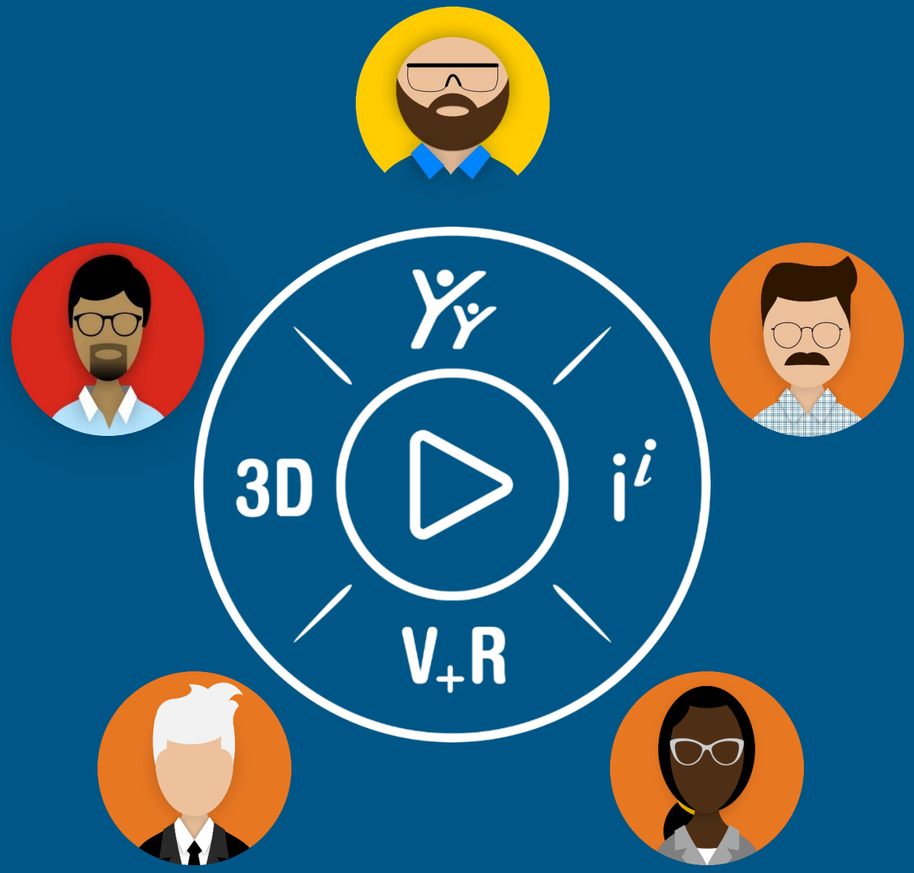
3D
i
V+R

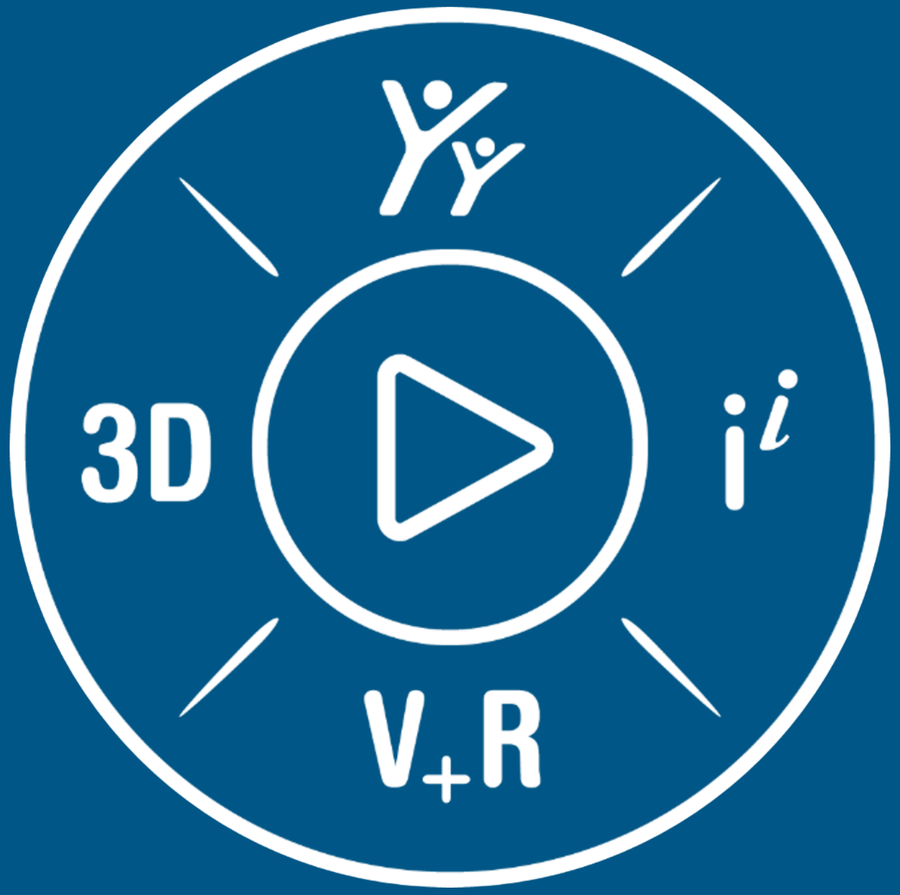
3D
i
V+R

Recap + Giveaway winner

15.10 – 15:30

By Dolf Broekaart

Go Digital, Stay Human

15:30

By Christian Kromme

Break-out sessions

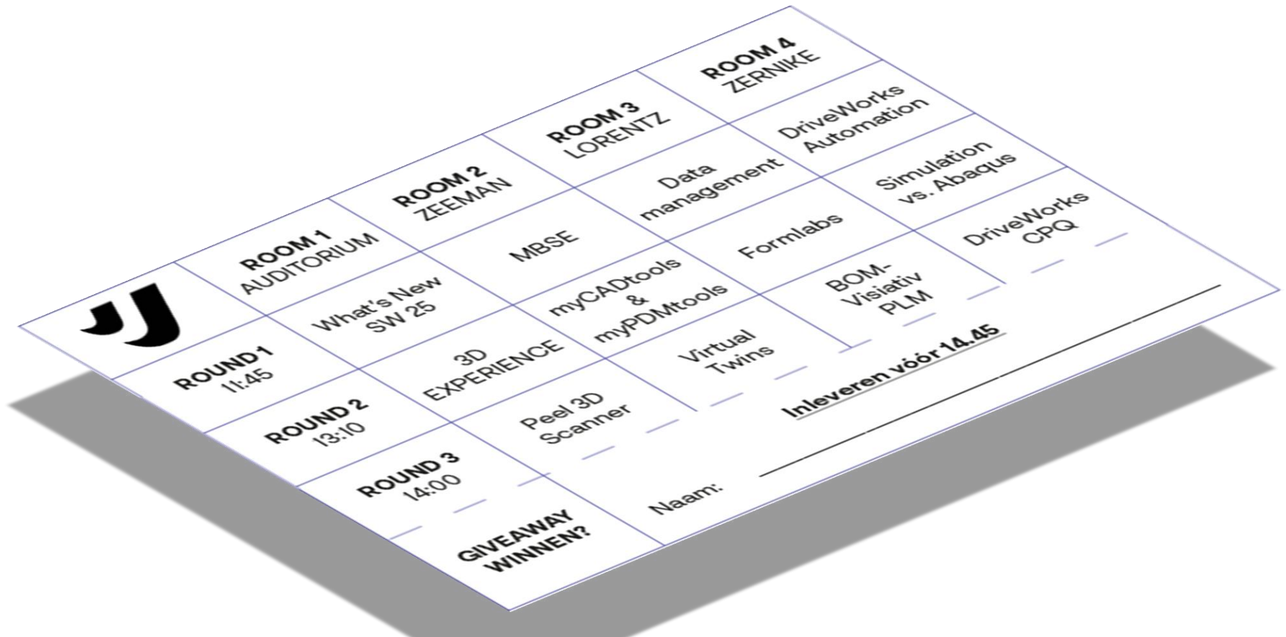

Round 1:	11:45 – 12:30
Break:	12:30 – 13:10
Round 2:	13:10 – 13:55
Round 3:	14.00 – 14:45
Break:	14:45 – 15:10

visiativ